GOULD
RECORDING SYSTEMS
1707 SERIES
GOULD 200
BC 578174

GOULD BRUSH

MANUAL PART NO.
801707

Be578174

1707 SERIES
GOULD 200
RECORDING SYSTEMS

OFFICIAL RECORDS STATION
FILE COPY
FACILITIES APR 18 19

PRINTED 5-10-78

Gould Inc., Instruments Division
3631 Perkins Avenue, Cleveland, Ohio 44114

2nd PRINTING
PRINTED IN U.S.A.

Digitized by the Internet Archive
in 2025

https://archive.org/details/manualsplus_05842

SYSTEM CONFIGURATION

This solid state Mark 200 System, Model 2222-1707-210, incorporates the components that are noted in the list that follows.

QTY	COMPONENT AND MODEL NUMBER
1	Preamplifier, Model 13-4185-05
	Preamplifier, Model
	Preamplifier, Model
	Preamplifier Frame, Model 11-4588-
1	Oscillograph Model 2222-2607-60
1	System Power Panel, Model 11-1603-10
	System Power Panel, Model 11-1603-10813
1	Main Connector Panel, Model 11-1601-11
	Internal Chart Take-Up, Model 11-2231-01
	External Chart Take-Up, Model
4	Drive Amplifier, Model 15-5221-11
	Drive Amplifier, Model 15-5221-21
	Multimarker Event Amplifier, Model 13-5281-01
	Event Marker Kit Model

XXXX-1707-XXX

- 1 & 2 use 11-1603-10 & 11-1601-11 Main and Power Panels
- 4 & 5 use 11-1603-10813 & 11-1601-11 Main and Power Panels
- 1 Single 80mm penmotors use 15-5221-21 drive amplifier
- 2 dual 40mm penmotors use 15-5221-11 drive amplifier
- 8 Multimarker event penmotor use 13-5281-01 Multimarker amplifier

TABLE OF CONTENTS

SECTION	DESCRIPTION	PAGE
I	GENERAL INFORMATION	1.1
	1.1 Scope	1.1
	1.2 System Description	1.1
	1.3 Oscillograph Description	1.3
	1.4 System Power Panel & Amplifier Calibration Unit Description	1.4
	1.5 Main Connector Panel Description	1.4
	1.6 Drive Assembly Description	1.5
	1.7 Preampliifer Frame Description	1.7
	1.8 Optional Data Loss Unit Description	1.7
	1.9 Optional Accessories Description	1.7
	1.10 Specifications	1.8
	1.11 Supplies & Accessories	1.11
II	INSTALLATION	2.1
	2.1 General	2.1
	2.2 Incoming Inspection	2.1
	2.3 Signal Connections	2.1
	2.4 Oscillograph Installation	2.2
	2.5 Main Connector Panel Installation	2.8
	2.6 System Power Panel Installation	2.8
	2.7 Amplifier Calibration and System Power Assembly Installation	2.10
	2.8 Drive Amplifier Frame and Relay Chassis Assembly Installation	2.11
	2.9 Preamplifier Frame Installation	2.12
	2.10 Chart Take-Up Installations	2.16
III	OPERATION	3.1
	3.1 General	3.1
	3.2 Preamplifiers 4100, 4200 and 4400 Series	3.1
	3.3 Oscillograph Control Description	3.1
	3.4 Amplifier Calibration Unit Control Description	3.6
	3.5 Oscillograph Operational Check	3.7
	3.6 Preliminary Operation	3.8
	3.7 Chart Take Up Operation	3.11
IV	THEORY OF OPERATION	4.1
	4.1 General	4.1
	4.2 Drive Amplifier 15-5221-11 and 15-5221-21	4.2
	4.3 Multimarker Amplifier 13-5281-01	4.4
V	TROUBLESHOOTING	5.1
	5.1 General	5.1
	5.2 Procedures	5.1
	5.3 Transistor Troubleshooting	5.1
	5.4 Troubleshooting Tables	5.3
	5.5 Test Waveforms	5.16
VI	MAINTENANCE	6.1
	6.1 General	6.1
	6.2 Loading or Changing Chart Paper-Vertical Oscillograph	6.1
	6.3 Loading or Changing Chart Paper—Horizontal Oscillograph	6.2

SECTION		DESCRIPTION	PAGE
VI (Continued)			
	6.4	Chart Paper Supply Indicator	6.3
	6.5	Ink Supply	6.3
	6.6	Cleaning and Inspection	6.5
	6.7	Tools and Equipment	6.5
	6.8	Chart Paper Tension	6.6
	6.9	Pressure Roller	6.6
	6.10	Paper Centering and Tracking	6.7
	6.11	Chart Speed Measurement	6.7
	6.12	Pen Pressure Measurement	6.8
	6.13	Pen Pressure Adjustment	6.8
	6.14	Lapping Writing Pens	6.9
	6.15	Pen Cleaning	6.9
	6.16	Maintenance Tips on Ink System	6.10
	6.17	Oscillograph Electrical Inspection	6.10
	6.18	System Power Panel Inspection	6.11
	6.19	Main Connector Panel Inspection	6.11
	6.20	Drive Assembly Inspection	6.11
	6.21	Amplifier Calibration Unit Inspection	6.12
	6.22	Data Loss Sensors Inspection	6.13
	6.23	Interchannel Event Marker Inspection	6.14
	6.24	Multi-Choice Timer	6.15
	6.25	Analog Pen Replacement	6.15
	6.26	Event Marker Pen Replacement	6.16
	6.27	Penmotor Band Replacement	6.17
	6.28	40MM Penmotor Replacement —Vertical Oscillograph	6.18
	6.29	80MM Penmotor Replacement —Vertical Oscillograph	6.20
	6.30	8-Channel Multimarker Penmotor Replacement— Vertical Oscillograph	6.21
	6.31	Event Marker Replacement—Vertical Oscillograph	6.22
	6.32	40MM Penmotor Replacement—Horizontal Oscillograph	6.23
	6.33	80MM Penmotor Replacement—Horizontal Oscillograph	6.24
	6.34	8-Channel Multimarker Penmotor Relacement Horizontal Oscillograph	6.25
	6.35	Event Marker Replacement—Horixontal Oscillograph	6.26
	6.36	Inking System Replacement—Vertical Oscillograph	6.26
	6.37	Inking System Replacement—Horizontal Oscillograph	6.30
	6.38	Bleeding Inking System	6.31
	6.39	Removal of Chart Drive Assembly	6.31
	6.40	Installation of Chart Drive Assembly	6.34
	6.41	Converting to 40MM, 80MM or Multimarker Channels	6.34
VII		CALIBRATION	7.1
	7.1	General	7.1
	7.2	Test Equipment	7.1
	7.3	Preliminary Checks	7.1
	7.4	Checkout of Drive and Oscillograph Operation	7.2
	7.5	Amplifier Calibration Unit	7.2
	7.6	Drive Amplifier Calibration	7.3
	7.7	Event Amplifier Calibration	7.6
	7.8	Data Loss Functions	7.6
VIII		PARTS IDENTIFICATION	8.1
	8.1	General	8.1
IX		SCHEMATICS	9.1

LIST OF ILLUSTRATIONS

FIGURE	TITLE	PAGE
1-1	GOULD 200 SYSTEM WITH VERTICAL OSCILLOGRAPH	1.1
1-2	GOULD 200 SYSTEM WITH HORIZONTAL OSCILLOGRAPH	1.1
1.3	SYSTEM BLOCK DIAGRAM	1.2
1-4	VERTICAL OSCILLOGRAPH	1.3
1-5	HORIZONTAL OSCILLOGRAPH	1.4
1-6	SYSTEM POWER PANEL	1.4
1-7	AMPLIFIER CALIBRATION UNIT	1.4
1-8	MAIN CONNECTOR PANEL	1.5
1-9	DRIVE FRAME ASSEMBLY	1.6
1-10	DRIVE AMPLIFIER KEYING DEVICE	1.6
1-11	DRIVE AMPLIFIER ASSEMBLY	1.6
1-12	FREQUENCY RESPONSE – 40mm PENMOTOR	1.9
1-13	FREQUENCY RESPONSE – 80mm PENMOTOR	1.9
2-1	INSTALLATION OF VERTICAL OSCILLOGRAPH 2607-70	2.3
2-2	INSTALLATION OF VERTICAL OSCILLOGRAPH 2607-60	2.3
2-3	INSTALLATION OF VERTICAL OSCILLOGRAPH 2607-70	2.4
2-4	INSTALLATION OF VERTICAL OSCILLOGRAPH 2607-70	2.4
2-5	OUTLINE DIMENSIONS	2.5
2-6	INSTALLATION OF HORIZONTAL OSCILLOGRAPH 2607-60	2.6
2-7	INSTALLATION OF HORIZONTAL OSCILLOGRAPH 2607-60	2.8
2-8	INSTALLATION OF MAIN CONNECTOR PANEL	2.9
2-9	INSTALLATION OF SYSTEM POWER PANEL	2.9
2-10	INSTALLATION OF SYSTEM POWER PANEL	2.9
2-11	INSTALLATION OF AMPLIFIER CALIBRATION AND SYSTEM POWER ASSEMBLY	2.10
2-12	INSTALLATION OF AMPLIFIER CALIBRATION AND SYSTEM POWER ASSEMBLY	2.11
2-13	INSTALLATION OF AMPLIFIER CALIBRATION AND SYSTEM POWER ASSEMBLY	2.11
2-14	INSTALLATION OF AMPLIFIER CALIBRATION AND SYSTEM POWER ASSEMBLY	2.12
2-15	INSTALLATION OF DRIVE AMPLIFIER FRAME	2.13
2-16	INSTALLATION OF DRIVE AMPLIFIER FRAME	2.13
2-17	INSTALLATION OF INTERNAL CHART TAKEUP MODEL 11-2231-01	2.17
2-18	INSTALLATION OF TAKEUP KIT MODELS 11-2402-41 AND 11-2400-61	2.19
2-19	INSTALLATION OF TAKEUP KIT MODEL 11-2402-51	2.19
3-1	VERTICAL OSCILLOGRAPH FRONT PANEL CONTROLS	3.1
3-2	HORIZONTAL OSCILLOGRAPH FRONT PANEL CONTROLS	3.4
3-3	AMPLIFIER CALIBRATION AND SYSTEM POWER ASSEMBLY	3.6
4-1	RECORDER BLOCK DIAGRAM USING DRIVE AMPLIFIERS	4.1
4-2	INPUT LIMITER CIRCUIT	4.2
4-3	DEMODULATOR AND A.C. AMPLIFIER CIRCUIT	4.2
4-4	UNREGULATED POWER SUPPLY	4.3
4-5	REGULATED POWER SUPPLY	4.3
4-6	RECORDER BLOCK DIAGRAM USING MULTIMARKER AMPLIFIER	4.4

FIGURE	TITLE	PAGE
5-1	TRANSISTOR CONSTRUCTION AND TERMINAL IDENTIFICATION	5.2
5-2	TRANSISTOR CONSTRUCTION AND TERMINAL IDENTIFICATION	5.2
5-3	TRANSISTOR TEST	5.2
5-4	20KHz OSCILLATOR 442822-910 TEST POINT LOCATIONS	5.19
5-5	AMPLIFIER ASSEMBLY 848155 TEST POINT LOCATIONS	5.24
5-6	20KHz OSCILLATOR 846584 TEST POINT LOCATIONS	5.29
5-7	AMPLIFIER ASSEMBLY 848167 TEST POINT LOCATIONS	5.34
6-1	LOADING CHART PAPER	6.1
6-2	VERTICAL OSCILLOGRAPH LEFT SIDE	6.2
6-3	HORIZONTAL OSCILLOGRAPH RIGHT SIDE	6.2
6-4	VERTICAL OSCILLOGRAPH INK MASTER CYLINDER	6.4
6-5	HORIZONTAL OSCILLOGRAPH INTERIOR-REFERENCE VIEW	6.6
6-6	VERTICAL OSCILLOGRAPH PRESSURE ROLLER ADJUSTMENT	6.7
6-8	PEN PRSSURE MEASUREMENT	6.8
6-9	PEN PRESSURE ADJUSTMENT	6.8
6-10	LAPPING ANALOG PEN	6.9
6-11	HYPODERMIC NEEDLE MODIFICATION	6.10
6-12	DATA LOSS SENSOR CONTACT ADJUSTMENT	6.14
6-13	ANALOG PEN REPLACEMENT	6.16
6-14	PENMOTOR PARTIAL EXPLODED VIEW	6.18
6-15	BAND REPLACMENT 341409-915 INSTALLED ON PENMOTOR	6.18
6-16	40MM PENMOTOR REPLACEMENT	6.19
6-17	ANALOG & MULTIMARKER PENMOTOR REPLACEMENT VERTICAL OSCILLOGRAPH	6.20
6-18	80MM PENMOTOR REPLACEMENT	6.21
6-19	8 CHANNEL MULTIMARKER PENMOTOR REPLACMENT	6.22
6-20	EVENT MARKER REPLACEMENT	6.23
6-21	EVENT MARKER REPLACEMENT	6.26
6-22	INK MANIFOLD ASSEMBLY	6.27
6-23	INKING SYSTEM—VERTICAL OSCILLOGRAPH	6.29
6-24	INKING SYSTEM—HORIZONTAL OSCILLOGRAPH	6.30
6-25	REMOVAL AND INSTALLATION OF CHART DRIVE ASSEMBLY (1 of 2)	6.32
6-26	REMOVAL AND INSTALLATION OF CHART DRIVE ASSEMBLY (2 of 2)	6.32
6-27	CHART DRIVE ASSEMBLY—EXPLODED VIEW	6.33
6-28	RELAY CHASSIS ASSEMBLY	6.35
6-29	DRIVE AMPLIFIER FRAME—REAR VIEW	6.36
6-30	DRIVE AMPLIFIER COMBINATION—REFERENCE	6.37
6-31	AMPLIFIER AND HARNESS INSTALLATION	6.38
7-1	CALIBRATION EXTERNAL CONTROLS	7.4
7-2	CALIBRATION TEST AND ADJUSTMENT POINTS	7.5
8-1	MODEL 0000-1707-110 SYSTEM CONFIGURATION	8.3
8-2	MODEL 0000-1707-120 SYSTEM CONFIGURATION	8.5
8-3	MODEL 0000-1707-140 SYSTEM CONFIGURATION	8.7
8-4	MODEL 0000-1707-210 SYSTEM CONFIGURATION	8.9
8-5	MODEL 0000-1707-220 SYSTEM CONFIGURATION	8.11
8-6	MODEL 0000-1707-240 SYSTEM CONFIGURATION	8.13

SECTION I

GENERAL INFORMATION

1.1 SCOPE

This manual contains instructions for maintenance of the Gould Brush 1707 Series Recording Systems (Figs. 1-1 and 1-2). Included are descriptions of, and procedures for calibrating the system, trouble-shooting, removal and installation of components. It also contains theory of operation and an illustrated parts list.

1.2 SYSTEM DESCRIPTION

a. General

The 1707 Series is the most recent generation of Gould Brush 200 systems combining an effective pen position feedback system, high-torque pen-motors, rectilinear pen motion linkage, and presurized fluid writing. With the added advantages of all solid-state electronics and modular construction, the system now affords a flexibility in application never before achieved.

The result is a totally new concept in instrument design which allows any system to be tailored to specific requirements by selection from a broad range of "building block" subsystems. The systems shown in Figures 1-1 and 1-2 represent just two of the broad variety of configurations possible.

Subsystems from which selection can be made are: Oscillographs in a choice of two configurations, incorporating penmotor block modules with 40mm sweep, for higher-resolution 80mm sweep, or eight-channel multi-marker event-recording units; a drive assembly with matching amplifier modules; and a variety of input-conditioning preamplifiers (Fig. 1-3).

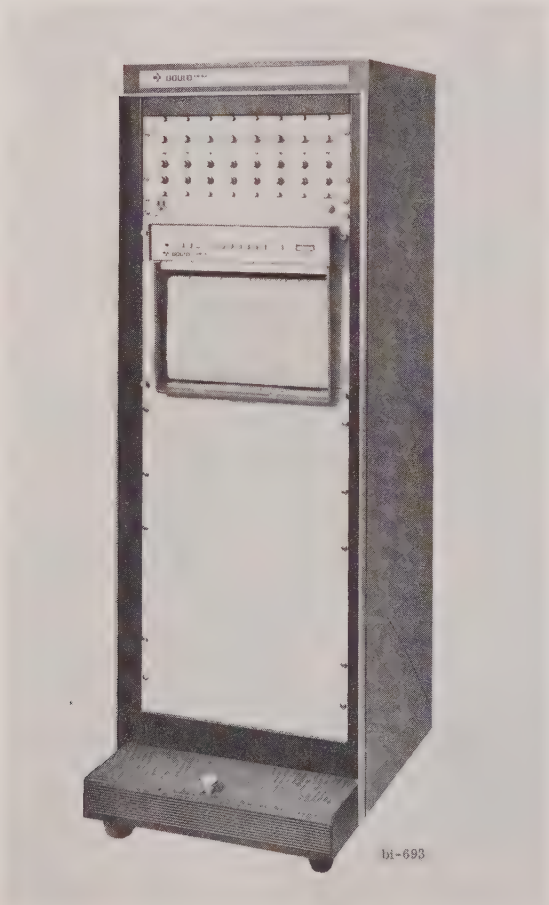

FIGURE 1-1 GOULD BRUSH 200 SYSTEM WITH VERTICAL OSCILLOGRAPH

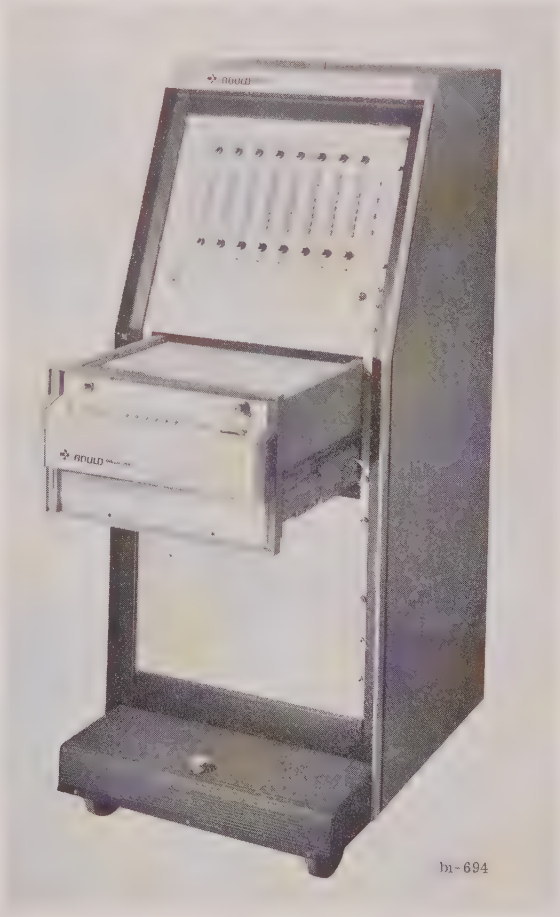

FIGURE 1-2 GOULD BRUSH 200 SYSTEM WITH HORIZONTAL OSCILLOGRAPH

Basic analog system linearity is better than 1/2% full scale. Frequency response is flat to 55 Hz full scale and to 100 Hz at reduced amplitudes. The unique Gould Brush Metrisite-controlled pen position feedback system is wear-free and insures controlled accuracy throughout recorder lifetime.

The oscillograph has 12 chart speeds from 0.05 to 200 millimeters per second, controlled by illuminated pushbuttons. The pressurized fluid assures uniform, clear traces on low-cost chart paper. Automatic signal limiters prevent possible pen damage thru overloading.

The preamplifiers, which accomodate the full spectrum of applications in the frequency range of 0 to more than 150 Hz, provide signal attenuation, full scale pen positioning, and variable gain control for each channel.

b. System Model Numbering

The system model numbers employ the series numeral 1707, a four-digit prefix, and three-digit suffix.

Prefix digits identify penmotors and order of placement from left to right facing the oscillograph:

1 – Single-pen 80 mm analog penmotor
2 – Dual-pen 40 mm analog penmotor
8 – 8-pen multimarker event penmotor
0 – No penmotor

Suffix digit indicates as follows:

First digit – Oscillograph configuration

1 – Vertical oscillograph
2 – Horizontal oscillograph
4 – Vertical oscillograph, medical features
5 – Horizontal oscillograph, medical features

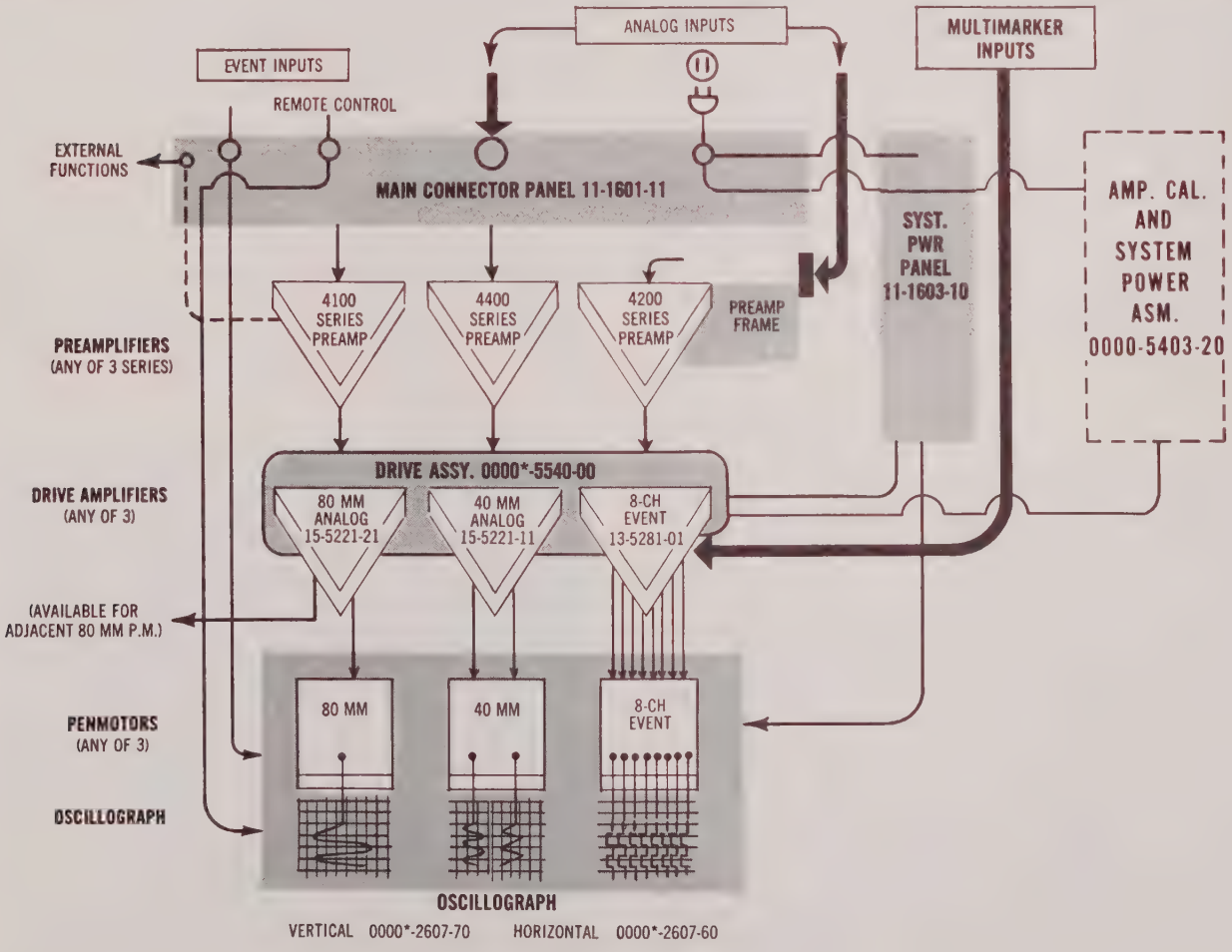

*0000 prefix replaced by digits, depending on penmotors used.

bi-695

FIGURE 1-3 SYSTEM BLOCK DIAGRAM

Second digit — preamplifier series

1 — 4100 series
2 — 4X00 series
4 — 4400 series

Third digit - System enclosures

0 — Vertical Rack	11-1154-60 (Vertical system only)
0 — Slope-front Rack	11-1140-60 (Horizontal system only)
1 — Shipping frame	467037
2 — Low Boy Console	11-1112-70 (Horizontal system only)

Example: Model 1122-1707-121 — System with two 80 mm penmotors and two dual 40 mm penmotors; vertical oscillograh; 4200 series preamplifiers; mounted in shipping frame.

1.3 OSCILLOGRAPH DESCRIPTION

a. Vertical

The Gould Multi-Channel Oscillograph, Model 2607-70 (Fig. 1-4) provides a new concept in versatility. Coupled with appropriate Gould components the oscillograph can be a part of four individual systems——either all alike, or combined in any of a number of standard configurations.

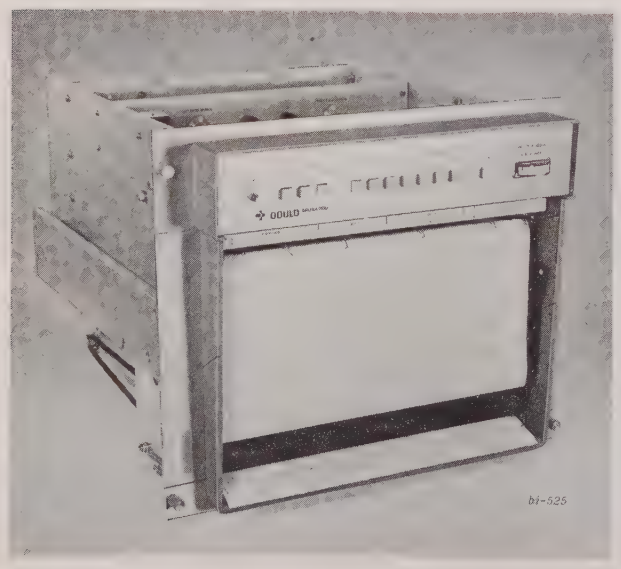

FIGURE 1-4 VERTICAL OSCILLOGRAPH

The writing system employs pressurized ink, assuring uniform, clear, rectilinear traces on low-cost rectangular-coordinate, graduated chart paper. Chart is delivered externally; or may be stored within the oscillograph on an easily accessible, optional, internal chart takeup.

Twelve chart speeds, from 0.05 millimeters to 200 millimeters per second, are selected by illuminated pushbuttons and may be changed instantly without loss of data. Two standard five-position event markers may be operated from external sources, or from an internal one-second, ten-second, and optional auxiliary timer.

The flush-mounted, vertical oscillograph features a highly visible illuminated readout surface and is designed throughout for convenience in use, easy chart paper loading, and functional versatility. The unit, occupying 15-3/4 inches of panel space is slide mounted and can be withdrawn to any point for ready access to event switches, fuses, and ink indicator. Paper supply drawer may be pulled out independently for chart loading without disturbing pens. When paper supply drawer is open, ink flow is stopped and pressure removed, preventing leakage from pens. Internal or external chart take-up is optional.

b. Horizontal

The horizontal oscillograph model 2607-60 (Fig. 1-5) incorporates the same basic design features of the vertical model, but displays its data on a horizontal surface.

It is also a pull-out oscillograph and may be mounted at convenient desk height for easy annotation, ideal for computer readout. Pull-out handles are fitted with spring loaded latches which hold the oscillograph in any position.

Unit may be pulled out to full depth for servicing. The chart speed and control mode pushbuttons plus paper supply indicator are mounted on sloped front panel for easy visibility. Timer-event marker selector switches are also readily available on front panel. External chart take-up is optional.

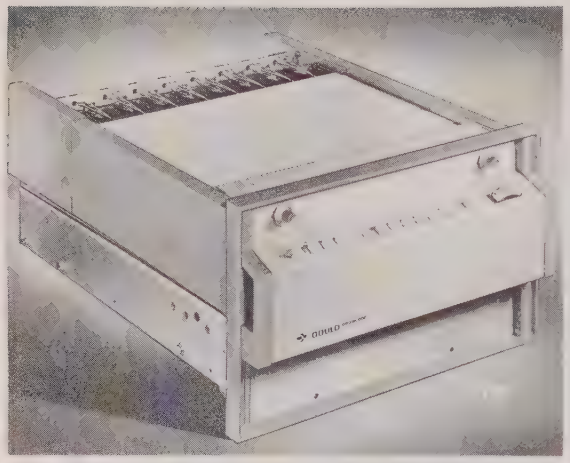

FIGURE 1-5 HORIZONTAL OSCILLOGRAPH

1.4 SYSTEM POWER PANEL & AMPLIFIER CALIBRATION UNIT DESCRIPTION

The system power panel Model 11-1603-10 (Fig. 1-6) is mounted on the front of the system cabinet and provides a convenient location of the main power switch. The power switch is a pushbutton ON—OFF switch which controls power to the entire system thru the Main Connector Panel. The switch is illuminated when power is on to the system. There is a convenience outlet on some systems which is also mounted on the panel. The outlet is three-pronged and grounded for use with electrical devices requiring 115 volts 60 cps. The outlet is not controlled by the power switch. It is fused for 5 amperes maximum.

The amplifier calibration unit Model 0000-5403-20 (Fig. 1-7) was designed as an optional component to be used with the 4X00 series preamplifiers to provide a precision reference source. The unit completely duplicates the function of the system power panel, which is removed when calibration unit is used, and provides for individual calibration of each drive amplifier channel. The unit is normally front panel mounted and located above vertical or horizontal oscillograph. It derives its power from the main connector panel and is interconnected by cable to the relay assembly.

The relay assembly portion of this unit mounts to rear of drive amplifier frame. Power to energize the relay is supplied by amplifier calibration unit portion thru a cable to connector J-170. The unit is also interconnected between preamplifier signal outputs (4200 and 4400 series) and drive amplifier signal inputs.

1.5 MAIN CONNECTOR PANEL DESCRIPTION

The main connector panel model 11-1601-11 (Fig. 1-8) is used to interconnect oscillograph and drive amplifier frame to main power source thru master power switch. The connectors and terminal boards on the panel provide a convenient location for the internal connections from the oscillograph, such as the event markers, operating voltages, limit contacts and remote control circuits. The internal connections from the preamplifiers such as coaxial cable inputs, mode inputs, and reference voltages, are also brought out to terminals on the main connector panel.

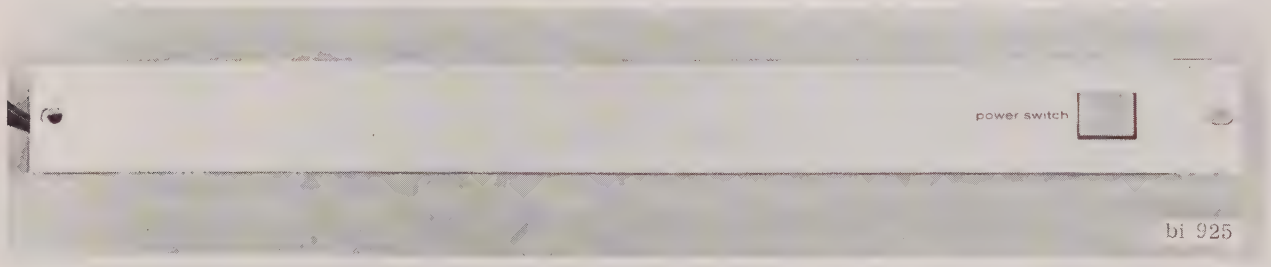

FIGURE 1-6 SYSTEM POWER PANEL

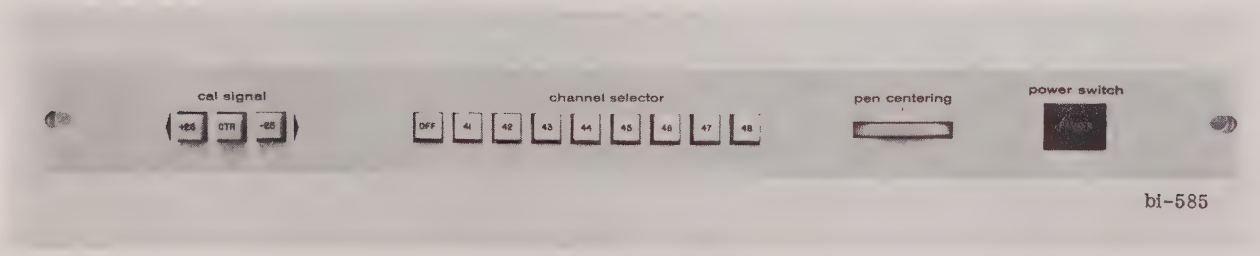

FIGURE 1-7 AMPLIFIER CALIBRATION UNIT

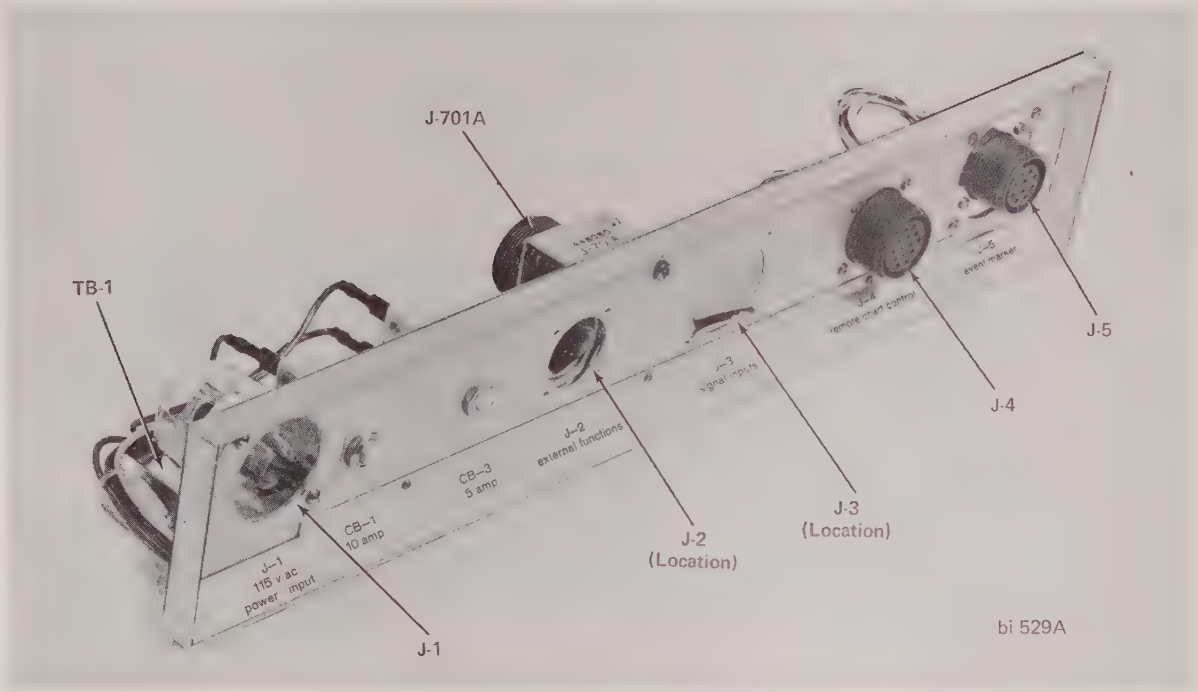

FIGURE 1-8 MAIN CONNECTOR PANEL

1.6 DRIVE ASSEMBLY DESCRIPTION

a. General

The drive assembly consists of drive amplifier and harness kits and a frame which houses the amplifiers. The frame has an indexing pin arrangement of eight usable positions, four of which have been assigned.

0 – No amplifier
1 – Amplifier for 80mm penmotor
2 – Amplifier for 40mm penmotor
8 – Amplifier for Multimarker penmotor

The drive amplifiers are plug-in modules, designed for mounting in drive frame. Each type is mechanically keyed (Fig. 1-10) to assure correct connection to associated penmotor. A different harness has been devised for each drive amplifier kit which connects to the penmotor in the oscillograph at one end and to drive amplifier frame at other end. The harnesses are made to fit all 1707 oscillographs, vertical or horizontal, without modification.

Supplied with each drive amplifier harness kit is a relay which mounts in a chassis behind the amplifier connector. This relay turns off power to the penmotor whenever stop button on oscillograph is pressed or the 28-volt supply in the oscillograph is interrupted. This prevents pen from tearing through paper when chart paper is not moving or is exhausted.

The relay chassis also includes two connectors to permit optional data loss circuits to be easily added to system. The data loss option also requires addition of data loss sensors to penmotors in oscillograph.

This system provides for the use of a maximum of four of the following drive amplifier and harness kits:

Model 11-2291-00 with 80 mm Drive Amplifier, Model 15-5221-21
Model 11-2292-00 with 40 mm Drive Amplifier, Model 15-5221-11
Model 11-2298-00 with Multimarkers Event Amplifier, Model 13-5281-01

b. Analog Drive Amplifiers 15-5221-11 & -21

The system utilizes 40 mm and/or 80mm solid-state, dual-channel drive amplifiers designed especially for this system. They provide final stage signal limiting, amplification, and position feedback. Screwdriver controls for damping, span, and limit adjustments are arranged on front of amplifiers for easy accessibility. The system contains up to four amplifiers, either all the same or in combinations. Each is mechanically keyed to assure correct connection to associated penmotor.

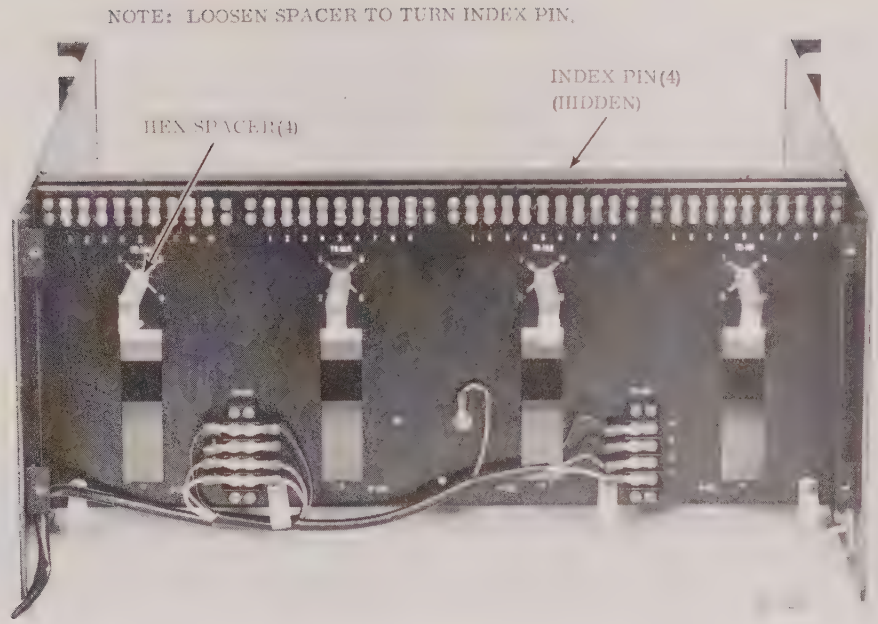

FIGURE 1-9 DRIVE FRAME ASSEMBLY

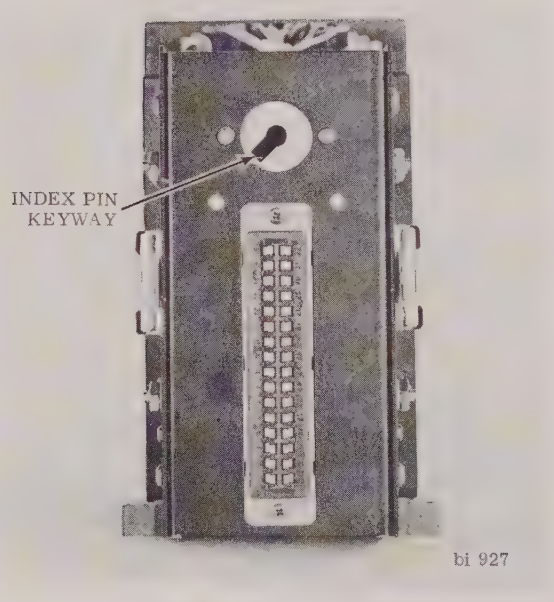

FIGURE 1-10
DRIVE AMPLIFIER KEYING DEVICE

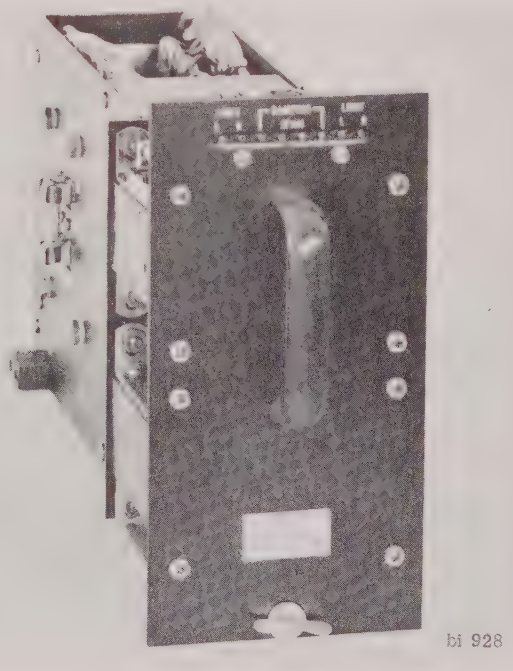

FIGURE 1-11 DRIVE AMPLIFIER ASSEMBLY

c. Multimarker Amplifier 13-5281-01

The amplifier contains eight identical circuits providing 5 to 30 volts ON and 0 to 4 volts OFF triggering for multimarker pens. Impedance is 100 K ohms. Four amplifiers mounted side by side convert the system to a 32-channel event recorder.

Multimaker inputs are made to a 25-pin connector on front of amplifier. A mating connector is provided with the system.

1.7 PREAMPLIFIER FRAME DESCRIPTION

The preamplifier frame assembly is located above the oscillograph and contains the 4200 series plug-in preamplifiers if used. It contains receptacles for supplying signal and power input as well as output connectors for the preamplifiers. The models used are the 11-4588-12 & -14.

1.8 OPTIONAL DATA LOSS UNIT DESCRIPTION

a. General

The data loss unit consists of Data Loss Panel, Model 0000-1605-00, with either one or both of the Data Loss Sensor Kits, Model 11-1711-00 (80mm penmotor) and Model 11-1712-00 (40mm penmotor). The unit senses both an EDGE and LOAD data loss as follows:

1. EDGE loss is sensed by the data loss sensor limit contacts mounted on the penmotor. The contacts, when closed, energize the common data loss relay and the EDGE indicator lamp on the data loss panel.

2. LOAD loss due to over-frequency in the signal or offset between signal voltage and feedback voltage will result in a different voltage out of the drive amplifier and cause the LOAD indicator lamp and common data loss relay to be energized.

NOTE: With RELAY PICKUP adjustment control turned fully counterclockwise, common data loss relay will not be energized.

b. Model Number Coding

The four digit prefix of the data loss panel model number, for example, 1182-1605-00, indicates the modular componets of each unit according to the following code:

1st digit (1) - 80mm penmotor requires one 80mm printed circuit board, two indicator lamps stamped EDGE and LOAD respectively, one Sensor Kit 11-1711-00, and one cable assembly with Molex connectors.

2nd digit (1) - Same as above except a new cable assembly is not required.

3rd digit (8) - Multimarker penmotor, lamps are not stamped (blank), unit does not require printed circuit boards, sensor kits or cable assembly.

4th digit (2) - 40mm penmotor, require two 40mm printed circuit boards, two dual indicator lamps stamped EDGE-LOAD. One sensor kit 11-1712-00, and one cable assembly.

1.9 OPTIONAL ACCESSORIES DESCRIPTION

a. Interchannel Event Markers

The three-position, Single-Channel Event Marker Model RA-2103-10 (part no. 341935-915) is installed between two analog channels. Signals are applied thru the main connector panel using a 28-volt external source. Multi-Channel Event Marker Kits, Model 11-2221-00 (7 channels used with 40mm penmotors) and Model 11-2221-01 (3 channels used with 80mm penmotors) are available for field installation.

Bi-directional Amplitude-sensitive Event Marker, 11-2123-00. A pulse width differentiating event marker used for recording variable-voltage time codes or event signals. The event marker is factory installed in left-hand margin in place of standard event marker.

b. Event Marker Amplifiers

Hi-impedance, 5 Volt Sensitivity, 13-5511-00.
A D.C. amplifier capable of converting a D.C. input signal to the level required to drive an event marker penmotor. Circuitry, including power supply, is solid state, and is contained entirely on one chassis. Input impedance is 100 Kohms. An input of 0 to 4 volts will cause no output. An input of +4.6 to +60 volts D.C. will cause an output of +24 volts D.C.

Medium Impedance, 1 Volt Sensitivity, 13-5511-01.
A D.C. amplifier capable of converting a D.C. input signal to level required to trigger standard or interchannel event markers. Circuitry, including power supply, is solid state and is factory installed in oscillograph chassis. Input impedance is 2.7 Kohms. An input of 0 to -1 volt will cause no output. An input signal of -1.5 to -30 volts D.C. will cause an output of +24 volts D.C.

Bi-direction Amplitude-sensitive, 13-5511-02.
A bi-polar D.C. amplifier used with a 11-2123-00 event marker. Circuitry, including power supply, is solid state and is factory installed in the oscillo-

graph. Input impedance is 100 Kohms. An input of 0 ±1 volts will cause no output. An input signal of +5 to +60 volts D.C. will cause an output of +24 volts D.C. An input signal of -5 to -60 D.C. will cause an output of -24 volts D.C. The input is two wire, isolated, and the output is two wire, isolated.

c. Chart Take-Up Kits

The following models of chart take-ups are available for installation on the vertical and horizontal oscillographs as applicable:

1. Model 11-2331-01. An internal full-roll take-up for the vertical oscillograph. An override switch inside oscillograph panel permits chart to run without take-up, for examination, then re-rolled.

2. Model 11-2402-41. An external full-roll take-up for the horizontal oscillograph. An override switch allows take-up to be stopped for record examination and then re-rolled.

3. Model 11-2402-51. An external short-run take-up for the vertical oscillograph. Will accommodate up to one-half roll utilizing power transfer from chart drive motor.

4. Model 11-2402-61. An external short-run take-up for the horizontal oscillograph. Similar to Model 11-2402-41, but equipped with a hexagon bar instead of a flanged reel.

d. Remote Control Panel, 443400-9153236

The remote control panel is fitted with all controls of the oscillograph which permits operation of the unit from a remote location. This includes chart drive on-off and all chart speeds.

e. Inclined Writing Table, 11-1501-10

The 30° inclined writing table is used on the vertical oscillograph to afford easy viewing where a unit is mounted below eye level. The table is installed over the standard vertical writing table and is easily removed.

1.10 SPECIFICATIONS

a. System

General

Weight	Approximately 500 pounds.
Paneling	Brushed aluminum finish standard on all front panels.
Configuration	Refer to drawings for each model number in the installation section for dimensions and placement of components.

Electrical

NOTE: Complete system specifications are modified by characteristics of preamplifier used. Only basic drive system characteristics are listed below. Refer to individual preamplifier manuals.

Input impedance	50,000 ohm ±1%
Signal input sensitivity	100 millivolts per chart division full scale ±2.5 volts, adjustable ±3%
D.C. linearity	±1/4 chart division (±0.5%)
A.C. linearity	±0.5%

Rise time ..... 10% to 90% in 4 milliseconds (20mm step)

Damping ..... Overshoot less than 2.5 divisions out of 20 with specified frequency response.

Frequency response ..... Refer to Figures 1-12 and 1-13.

Stability with time ..... 1/4 div/8 hrs.

Stability with temp ..... 1/50 div/20 °F. Maximum

Temperature range ..... Operating: +32° to +131° F
Storage: -40° to +160° F

Power input ..... 105 to 125 volts, 60 Hz, single phase. Approximately 500 watts maximum.

50 Hz, 115 volt model requires special oscillograph.

220 volt model requires addition of a 220/115 volt transformer kit.

b. Oscillograph

No. and type of channels ..... Up to four penmotor modules with each module containing either two 40mm analog, one 80mm analog, or one 8 channel event multimarker. Two event markers are standard and up to seven inter-channel event markers may be added.

Presentation ..... True rectilinear

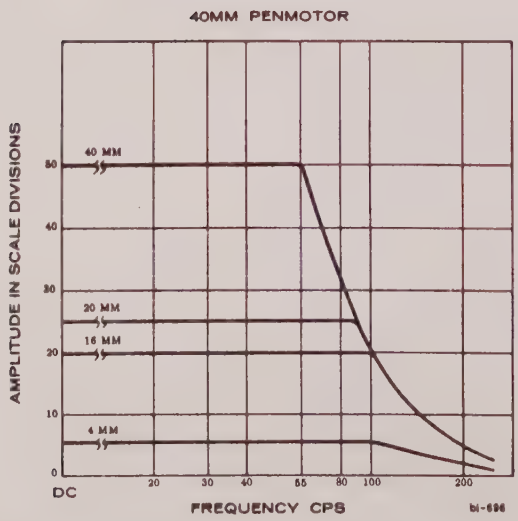

FIGURE 1-12 FREQUENCY RESPONSE—40mm PENMOTOR

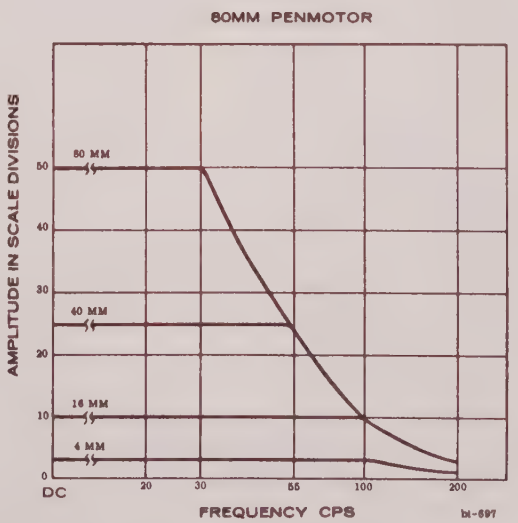

FIGURE 1-13 FREQUENCY RESPONSE—80mm PENMOTOR

Writing method ..... Pressurized fluid (closed system) 2-oz. fluid capacity; approximately 50 rolls normal recording.

Trace width ..... .01 inch nominal

Chart capacity ..... High contrast - 500 feet (approximately 8 hours at 5 mm/sec)

Chart speeds ..... 12, electrically selected; two ranges; .05, .1, .2, 5, 1, 2, mm/sec; and 5, 10, 20, 50, 100 and 200 mm/sec.

Chart speed accuracy ..... 1/4%; synchronous motor governed by line frequency.

Paper control ..... Tracking error and wander less than .025 inch, 20 feet after rethreading. Either external discharge or internal chart takeup.

Interlock light ..... Warns when chart paper supply is exhausted or writing table not positioned properly.

Timer ..... Internal, synchronized to line frequency--can actuate either or both markers. Dual pulse intervals of one second and 10, 20, 30, or 60 seconds.

Dimensions Vertical ..... Panel height 15-3/4 inches; width 19 inches; depth 21 inches. Overhang beyond panel is 2-1/2 inches closed, 14-1/2 inches for paper loading, 24 inches maximum (all sides extended)

Dimensions Horizontal ..... Panel height 10-1/2 inches; width 19 inches; depth 21 inches. Overhang beyond panel is 2-1/2 inches closed, 23 inches maximum (fully extended)

c. System Power Panel

Dimensions ..... Height, 1-3/4 inches
Width, 19 inches
Depth, 2 inches

Power Cable ..... 7 feet long

Power Switch Rating ..... 15 amperes at 115 volts A.C.

Power Switch Illumination ..... 115 Vac neon light in switch.

Power Input ..... Approximately 20 watts at 115 volts. A.C. power is supplied from main connector panel.

d. Amplifier Calibration Unit (Optional)

Dimensions	Height 1.72", Width 19", Depth 6.94"
Power Switch Rating	8.5 amps at 115 volts A.C. maximum.
Power Switch Illumination	28 volts D. C. light in switch.
Calibration Signal	±2.5 volts into 50 K ohms.
Stability	Temp: ± .1% over temp range: Range: ±65° F to +105° F. Voltage: ± .1% over 103 volts to 128 volts line voltage variation.
Pen Position Control	±3 divisions minimum (front panel)
Span Control	±5% of calibration signal (accessible from rear of unit).
Zero Reference Control	±.5% set at factory (mounted inside unit).
Power Input	Approximately 20 watts at 115 volts A.C. power is supplied from main connector panel.
Storage Temperature	-40° F to +185° F
Operating Temperature	+32° F to 131° F
Humidity	95% at +90° F

1.11 SUPPLIES & ACCESSORIES

Model Number	Description
RA-2823-31	Analog Pen
RA-2821-20	Event Marker Pen
11-2871-20	Event Marker Pen *
11-2734-02	Ink, blue, 2 oz.
240601-910	Gram, Gage
1-120922-2	Wrench, Pen Pressure Adjustment
341409-915	Band Replacement Tool
680294	Band Asm for 40mm Penmotor

*For use with amplitude sensitive event marker Model 11-2123-00.

684409 ..... Band Asm for 80mm Penmotor

11-1508-03 ..... Drive Amplifier Calibration Extender Cable

342960-915 ..... Preamplifier extension cable

11-2109-80 ..... Multimarker, 8-Channel

845077 ..... Penmotor, 40mm

442900-915 ..... Penmotor, 80mm

MODEL NUMBER	CHART PAPER
11-2933-50 (8888 System)	High gloss coated stock, 32-channel, 500 feet.
RA-2943-50 (2288 System)	High gloss coated stock, 50 divisions/channel, 500 feet, 4 40mm channels and 16 event marker channels.
11-2943-51 (1111 System)	High gloss coated stock, 4 80mm channels, 50 divisions/channel, 500 feet.
11-2953-50 (Universal)	High gloss coated stock, designed for use with any combination of penmotor modules regardless of position.
11-2963-50 (1122 System)	High gloss coated stock, 2 80mm channels and 4 40mm channels, 50 divisions/channel, 500 feet.
RA-2983-50 (2222 System)	High gloss coated stock, 50 divisions/channel, 500 feet.
RA-2983-50/S3106 (2222 System)	High gloss coated stock 50 divisions/channel, 500 feet (gray gridlines).
RA-2983-50/S3164 (2222 System)	High gloss coated stock 50 divisions/channel, 500 feet, 1 mm time base lines.

NOTE: Numbers in parenthesis correspond to penmotor combination with which it is normally used.

SECTION II

INSTALLATION

2.1 GENERAL

This section describes the checks and inspections that should be made upon receipt of the Brush Recorder. This section also contains the signal connections and installation instructions for the system components. As there are many optional items and accessories which may be put into a Brush 1707 Recording system, not all connection or installation instructions may be applicable.

2.2 INCOMING INSPECTION

1. Visually inspect unit for damage that may have occurred during shipment.

NOTE: On units equipped with negators, the oscillograph is secured to the frame at rear of unit with "L" brackets and screws. Remove the two screws attaching the oscillograph to the frame, but do not remove screws attaching negators to oscillograph.

2. Remove packing and tape from oscillograph.
3. Remove sheet of chart paper from under pens and load chart paper supply roll into unit.
4. Check ink supply.
5. Check for loose cable connections.
6. Be sure main power switch is in off position.
7. Attach power input cable to connector J-1 on main connector panel.
8. Attach other end of power input cable to correct power source.

NOTE: Power source to be 115 volts nominal ±10%, 60 cps, 425 watts nominal at 115 volts. Maximum of 500 watts.

9. Connect signal input cable to connector J-3 on main connector panel.

NOTE: Signal input cables are connected directly to preamplifier frame on systems with 4200 series preamplifiers.

10. Perform preliminary operation procedure described in the operation section of this manual.

2.3 SIGNAL CONNECTIONS

All external signals are applied to the main connector panel on the rear of the unit. These connections are as follows:

J-1 Power Input

Pin A	115 volts A.C. neutral in
Pin B	115 volts A.C. hot in
Pin C	Cabinet ground

J-2 External Functions

NOTE: Used with 4100 Series preamplifier (push-button models only).

Button	Pins
A	G, C
B	I, C
C	B, C
D	F, C

J-3 Signal Input

Not used with 4200 Series Preamplifier. Refer to 4100 and 4400 Series preamplifier schematics for signal input connections.

The signals for the multimarker are applied directly to the front of the amplifier thru the mating connector supplied with the unit.

J-4 Remote Chart Control

Pin A	Divide by 2
Pin B	Divide by 4
Pin C	Divide by 10
Pin D	Divide by 100
Pin E	Remote 28 volts — To Remote Switch
Pin F	External run
Pin G	28 volts neutral

Pin H Motor Ind.

Pins I thru N No connections

J-5 Event Marker Input Signals (For units with model numbers ending in 241).

Pin A L.H. Marker external input (Left deflection)

Pin B L.H. Marker neutral (Left deflection)

Pin C L.H. Marker external input (Right deflection)

Pin D L.H. Marker neutral (Right deflection)

Pin E R.H. Marker external input (Left deflection)

Pin F R.H. Marker neutral (Left deflection)

Pin G R.H. Marker neutral (Right deflection)

Pin H R.H. Marker neutral (Right deflection)

Pin I +28 volts hot (chart moving)

Pin J 28 volts neutral

J-701A Connector to Oscillograph

Pin A R.H. Marker in (Right deflection)

Pin B Divide by 2 relay

Pin C 115Vac Hot in

Pin D L.H. Marker neutral (Right deflection)

Pin E 28 volts neutral

Pin F R.H. Marker neutral (Right deflection)

Pin G R.H. Marker neutral (Left deflection)

Pin H L.H. Marker neutral (Left deflection)

Pin J Chassis ground

Pin K Divide by 100 relay

Pin L L.H. Marker in (Left deflection)

Pin M Motor relay (+28vdc on chart run)

Pin N Divide by 4 relay

Pin P R.H. Marker in (Left deflection)

Pin R +28 vdc on remote

Pin S External Run (short to Pin R)

Pin T L.H. Marker neutral (Right deflection)

Pin U Divide by 10 relay

Pin V L.H. Markers in (Right deflection)

2.4 OSCILLOGRAPH INSTALLATION

CAUTION: OSCILLOGRAPH WEIGHS APPROXIMATELY 100 POUNDS. USE TWO MEN TO REMOVE OR INSTALL OSCILLOGRAPH.

a. Vertical Oscillograph

1. Slide oscillograph into front of unit.
2. Install one spacer and four screws on each side of oscillograph (Fig. 2-1) and slide oscillograph into unit.
3. Feed penmotor cables in thru rear of oscillograph.
4. Pull oscillograph out to open position.
5. Plug penmotor cable connectors into proper penmotors.
6. Slide penmotor cables into notches on bottom of fuse panel assembly.

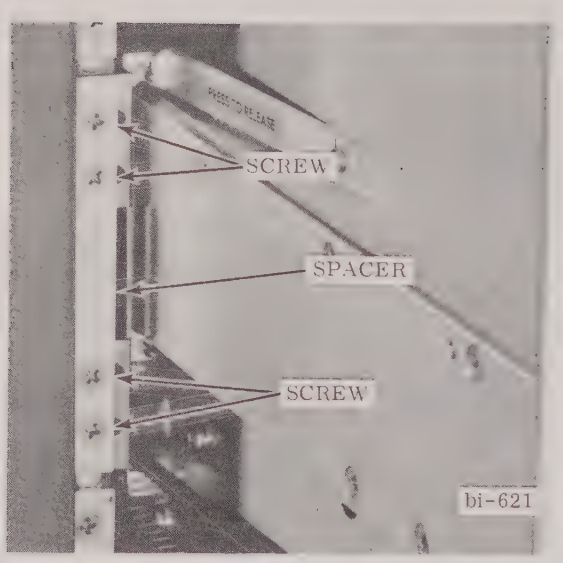

FIGURE 2-1 INSTALLATION OF VERTICAL OSCILLOGRAPH 2607-70

7. Position fuse panel assembly on mounting brackets and install four screws (Fig. 2-2).

8. Slide oscillograph into unit and tighten four captive thumbscrews.

9. Secure penmotor cables to rear of oscillograph with clamp and two screws.

10. Connect oscillograph cable connector to J-701 on rear of oscillogrpah (Fig. 2-3).

11. Position cover on rear of oscillograph and install seven screws and lockwashers (Fig. 2-4).

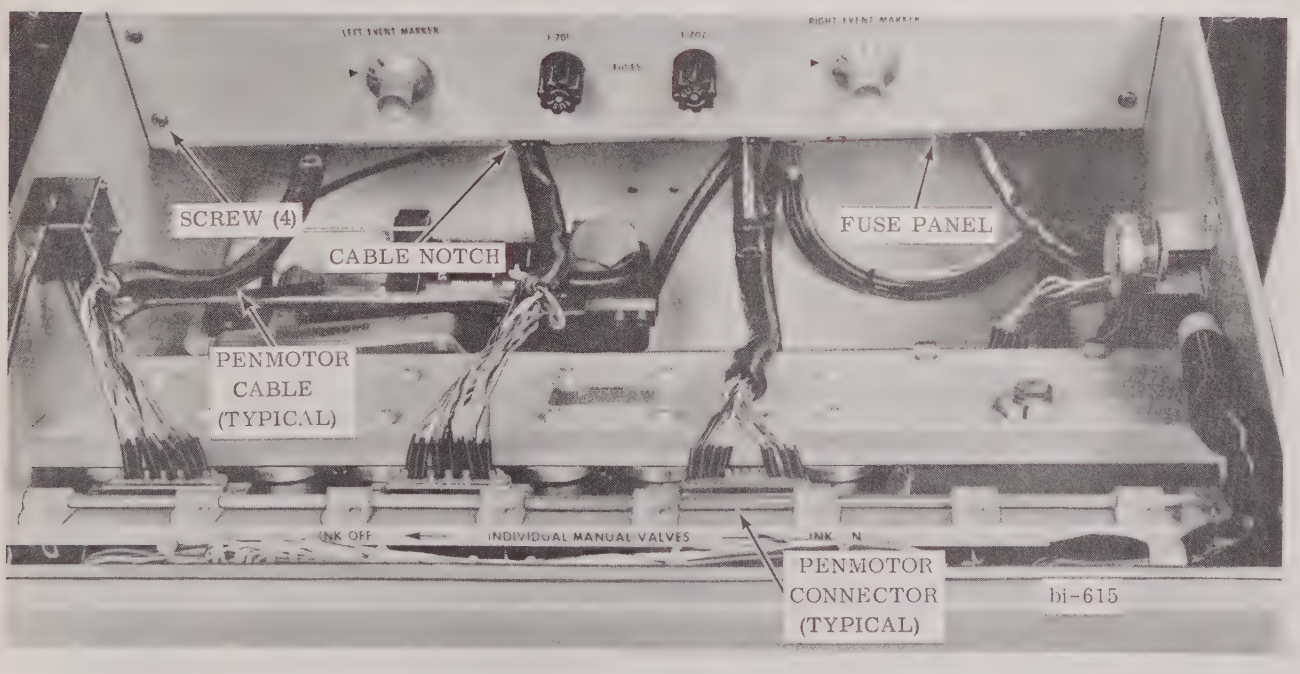

FIGURE 2-2 INSTALLATION OF VERTICAL OSCILLOGRAPH MODEL 2607-70

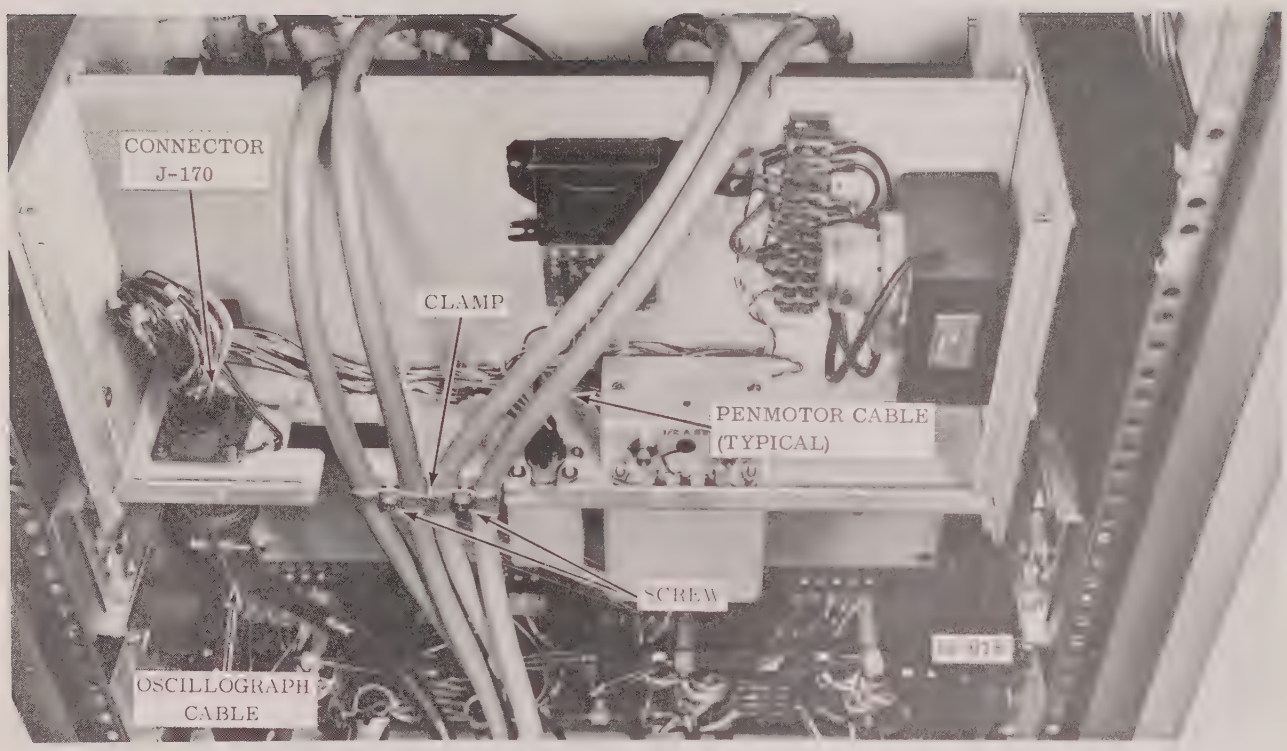

FIGURE 2-3 INSTALLATION OF VERTICAL OSCILLOGRAPH MODEL 2607-70

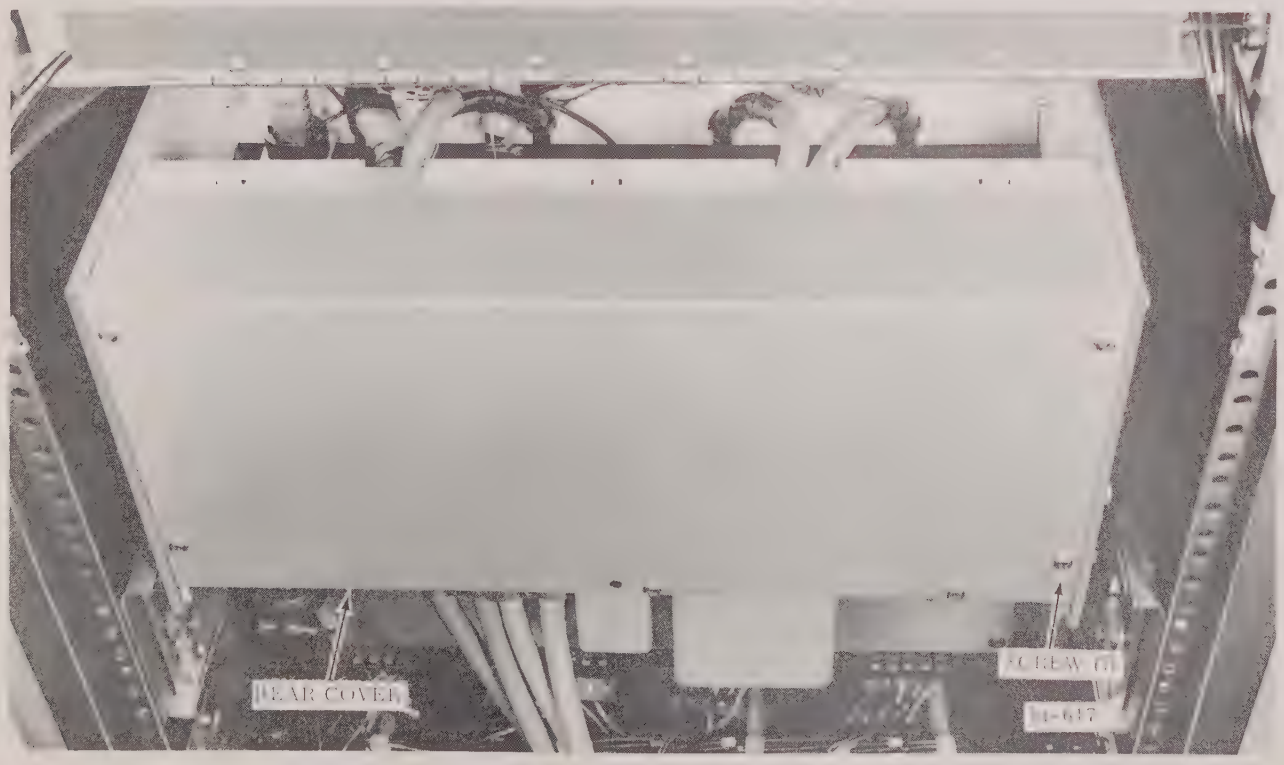

FIGURE 2-4 INSTALLATION OF VERTICAL OSCILLOGRAPH MODEL 2607-70

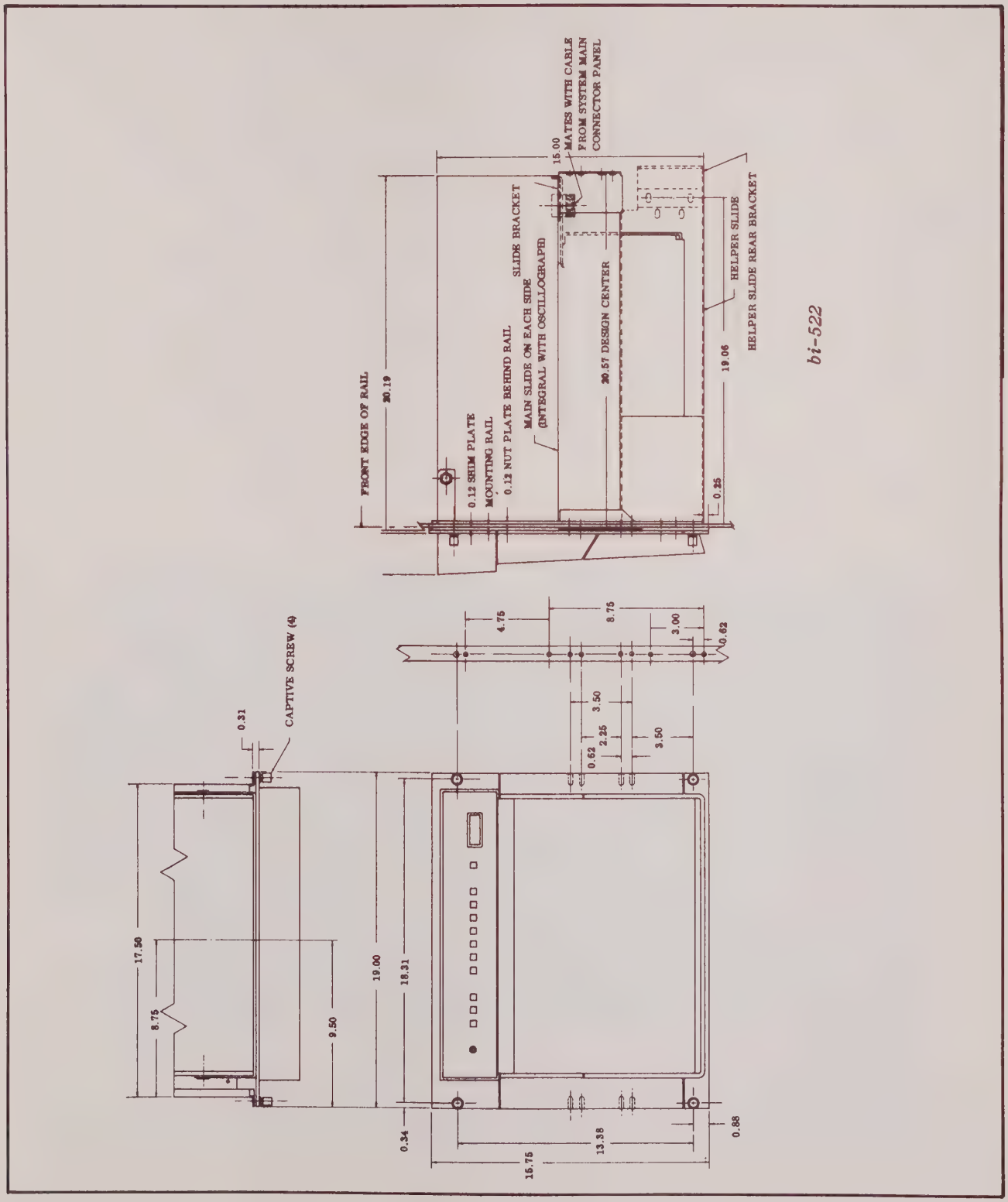

FIGURE 2-5 OUTLINE DIMENSIONS

b. Horizontal Oscillograph

1. Position oscillograph on slide brackets and install six screws, lockwashers, and flat washers from underside of oscillograph.

2. Connect rods to control panel on each side of oscillograph. Use a 1/4-inch wrench on square portion of rod and turn clockwise to tighten.

NOTE: Adjust rod so that oscillograph is free to slide when release lever is actuated.

3. Press release levers and slide oscillograph into unit.

4. Plug penmotor cable connectors into penmotors (Fig. 2-7).

5. Connect oscillograph cable connector to J-701 on rear of oscillograph (Fig. 2-7).

6. Secure penmotor cables to underside of rear cover support bar with two screws and clamps (Fig. 2-7).

7. Position cover plate on rear of oscillograph and install two screws and lockwashers.

8. Press release levers and pull oscillograph out to full open position.

9. Secure penmotor and oscillograph cables to underside of oscillogrpah with clamp and two screws.

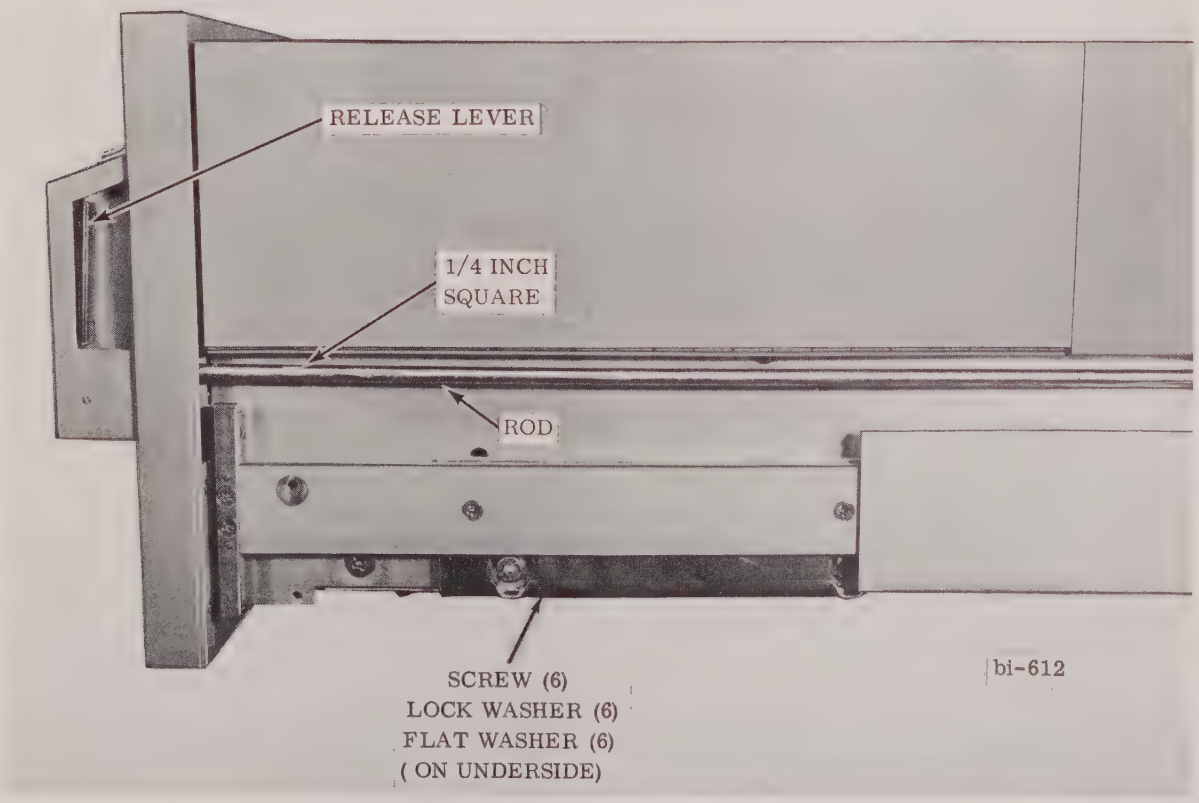

FIGURE 2-6 INSTALLATION OF HORIZONTAL OSCILLOGRAPH MODEL 2607-60

Information contained herein is considered proprietary to BRUSH INSTRUMENTS DIVISION OF CLEVITE CORPORATION. Release of this information is to facilitate the servicing and maintenance of Brush equipment only.

Under no circumstances shall this information be transmitted, reproduced, disclosed to, or used by any person or organization other than those engaged in such activities without the express written consent of BRUSH INSTRUMENTS DIVISION OF CLEVITE CORPORATION.

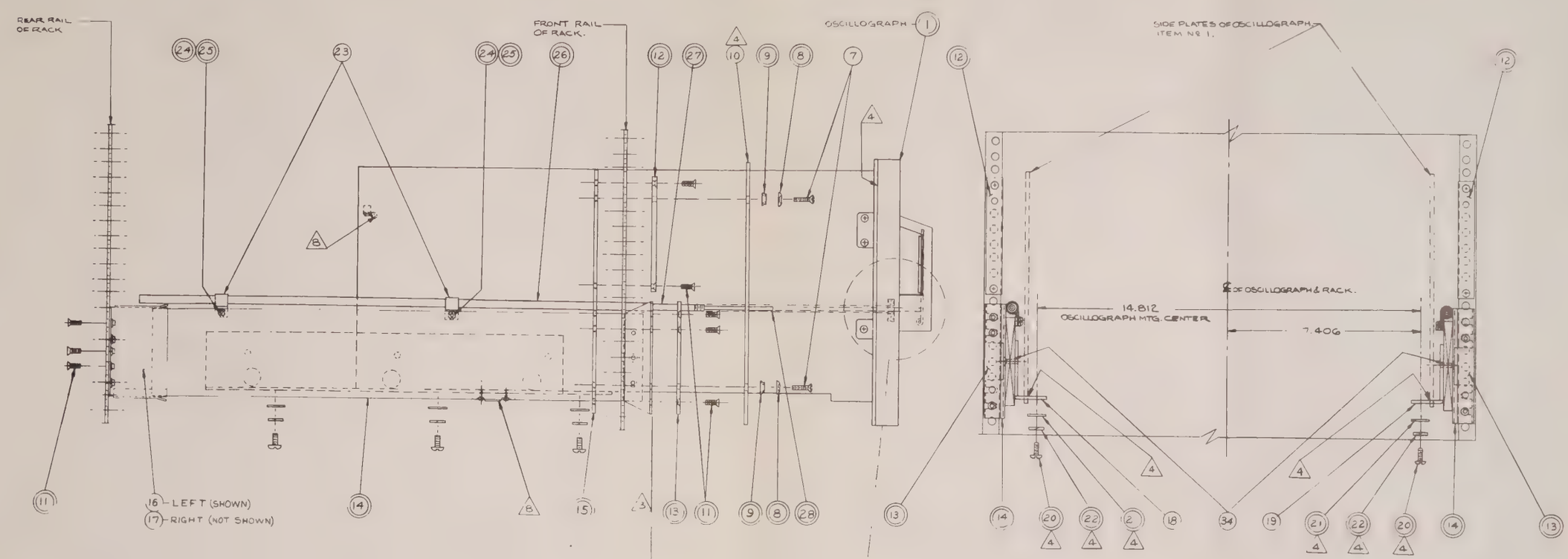

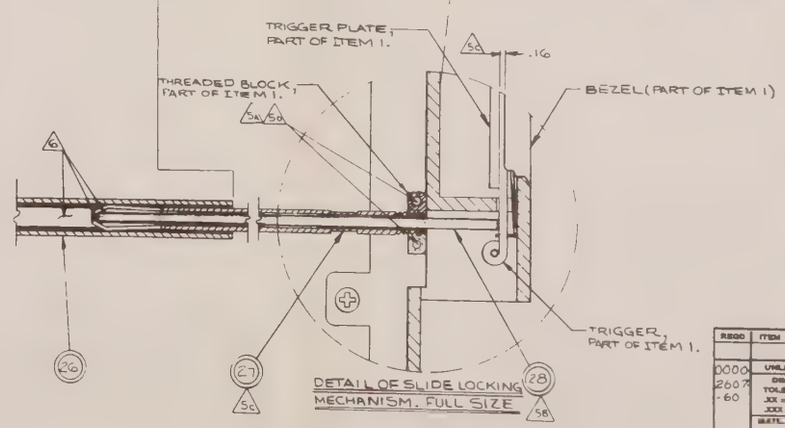

DETAIL OF SLIDE LOCKING MECHANISM. FULL SIZE

8. FOR CABLE CLAMPING INFORMATION SEE DWG. #

7. 0000 PREFIX IN MODEL NO. MAY VARY WITH DIFFERENT PENMOTOR COMBINATIONS.

6. APPLY SMALL AMOUNT OF GENERAL PURPOSE GREASE (BRUSH PART NO. 116850) TO I.D. OF ITEM 26 AND TO POINTS SHOWN.

5. CONNECT & ADJUST THE OSCILLOGRAPH TRAVEL VARIABLE STOPS IN THE FOLLOWING STEPS.
   a) REMOVE TWO SCREWS AT TOP OF CONTROL PANEL. THIS RELEASES PANEL WHICH CAN BE LAID ASIDE FOR ACCESS TO THE TWO SCREWS HOLDING THE THREADED BLOCK TO THE BEZEL ON EACH SIDE. LOOSEN EACH OF THE FOUR SCREWS APPROX. TWO TURNS.
   b) ITEM 28 TO PASS THROUGH THREADED HOLE IN BLOCK AND REST AGAINST TRIGGER AS SHOWN.
   c) WITH TOOL ON SQUARE PORTION OF ITEM 27, SCREW END INTO THREADED BLOCK, WHICH WILL LOCK OSCILLOGRAPH IN ANY POSITION OF SLIDE TRAVEL. ADJUST ITEM 27 SO THAT UNIT IS FREE TO SLIDE WHEN TRIGGER IS ACTUATED.
   d) TIGHTEN BOTH SCREWS ON THREADED BLOCK TO LOCK THE ADJUSTMENT.
   e) REPLACE FRONT CONTROL PANEL & SCREWS TO OSCILLOGRAPH.

4. INSTALL OSCILLOGRAPH BY SETTING ONTO SLIDE BRACKETS (ITEMS 18 & 19) WITH SLIDES FULLY EXTENDED AND SPREAD SLIGHTLY AND CENTER INTO RACK OPENING. POSITION UNIT TO HAVE TRIM PANEL (ITEM 10) BUTTING AGAINST STEP IN FRONT BEZEL WHEN SLIDES ARE IN FULL CLOSED POSITION. CLEARANCE OF UNIT TO RACK RAILS TO BE UNIFORM THROUGH ENTIRE LENGTH OF TRAVEL ON BOTH SIDES. FASTEN OSCILLOGRAPH INTO PLACE WITH ITEMS 20, 21 & 22. UNIT TO TRAVEL IN AND OUT OF RACK FREELY & WITHOUT STOPS.

3. END OF ITEM 26 TO BE FLUSH WITH FRONT BRACKET OF SLIDES (ITEM 14).

2. ASSEMBLE ITEMS TO RACK AS SHOWN BEFORE INSTALLING OSCILLOGRAPH.

1. BALLOON NUMBERS CORRESPOND WITH LIST ITEM NOS.

NOTES:

REQD	ITEM	PART NUMBER	DESCRIPTION	REMARKS

LIST OF MATERIAL

0000-2607-60	UNLESS OTHERWISE SPECIFIED DIMENSIONS ARE IN INCHES TOLERANCES .XX = ± .015 .XXX = ± .005 ANGLES = ± ½° SURFACE = √	BY: DR. ED VAUGHN 10-19-64; CH. R Bosch 1-5-65; APP. EOS 3/3/65	NAME: INSTRUCTIONS, INSTALLATION OSCILLOGRAPH MODEL Nº 0000-2607-60, -65 (7)	BRUSH INSTRUMENTS DIVISION OF CLEVITE CORP CLEVELAND OHIO U.S.A.
	MATL.		CODE IDENT	ISSUE CODE G
FIRST USE	ADD FIN.		SCALE 1/2	DWG. NO. 448569

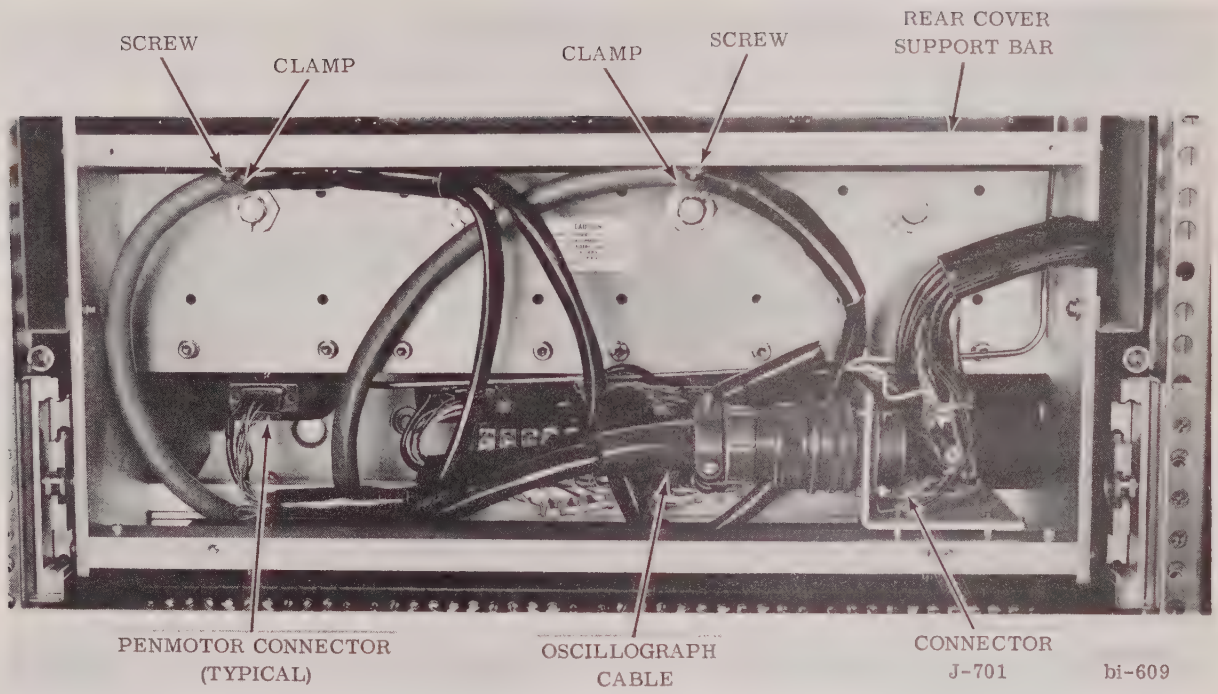

FIGURE 2-7 INSTALLATION OF HORIZONTAL OSCILLOGRAPH MODEL 2607-60

2.5 MAIN CONNECTOR PANEL INSTALLATION

1. Position main connector panel on rear of unit (approximately 10 mounting screw holes from the bottom) and install four screws attaching panel (Fig. 2-8).

2. Attach ground lead to left side of unit.

3. Attach leads to terminals 1 thru 10 on terminal board TB-1 as shown on the applicable schematic (448080 or 483944) for the particular model main connector panel used. Schematics are found in Section IX of this manual.

4. Position cover on terminal board TB-1 and install two screws.

5. Connect oscillograph cable connector to J-701A on main connector panel.

6. Connect power input cable to correct power source.

2.6 SYSTEM POWER PANEL INSTALLATION

1. Slide power switch panel into unit.

NOTE: Feed cable thru opening and down to main connector panel.

2. Secure panel to front of unit with four screws (Fig. 2-10).

3. Attach cable to side of unit with clamp and screw.

4. Refer to Figure 2-9 and connect leads to terminals 1 thru 6 on terminal board TB-1 of main connector panel as shown on the applicable schematic (444120 or 483944) for the particular main connector panel used. Schematics are found in section IX of this manual.

5. Position cover on TB-1 of main connector panel and install two screws and lockwashers.

6. Connect power input cable to correct power source.

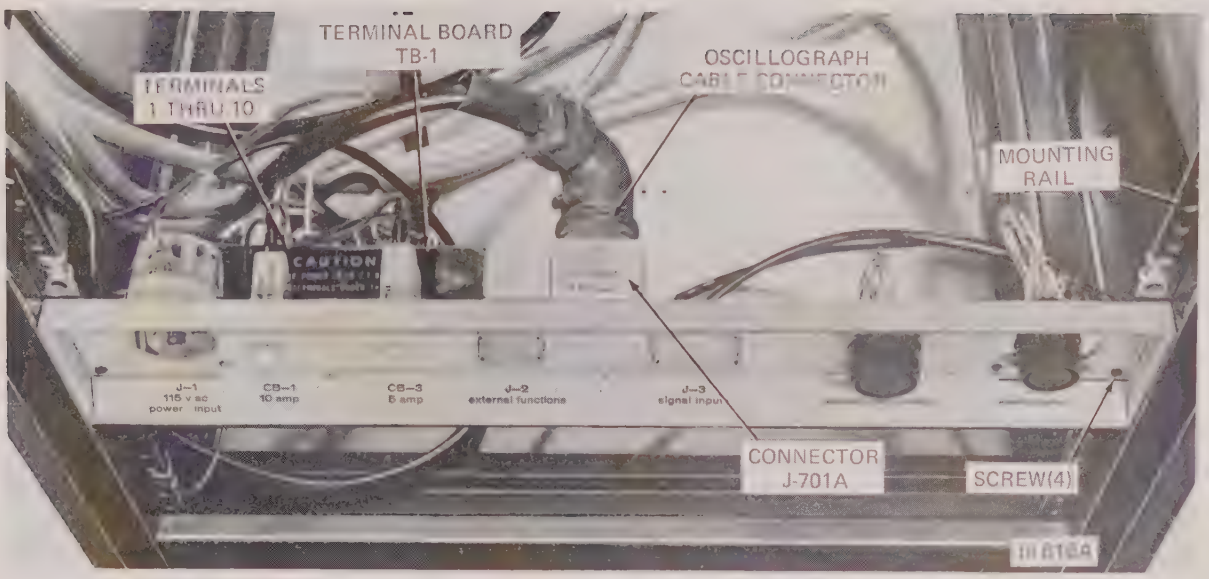

FIGURE 2-8 INSTALLATION OF MAIN CONNECTOR PANEL

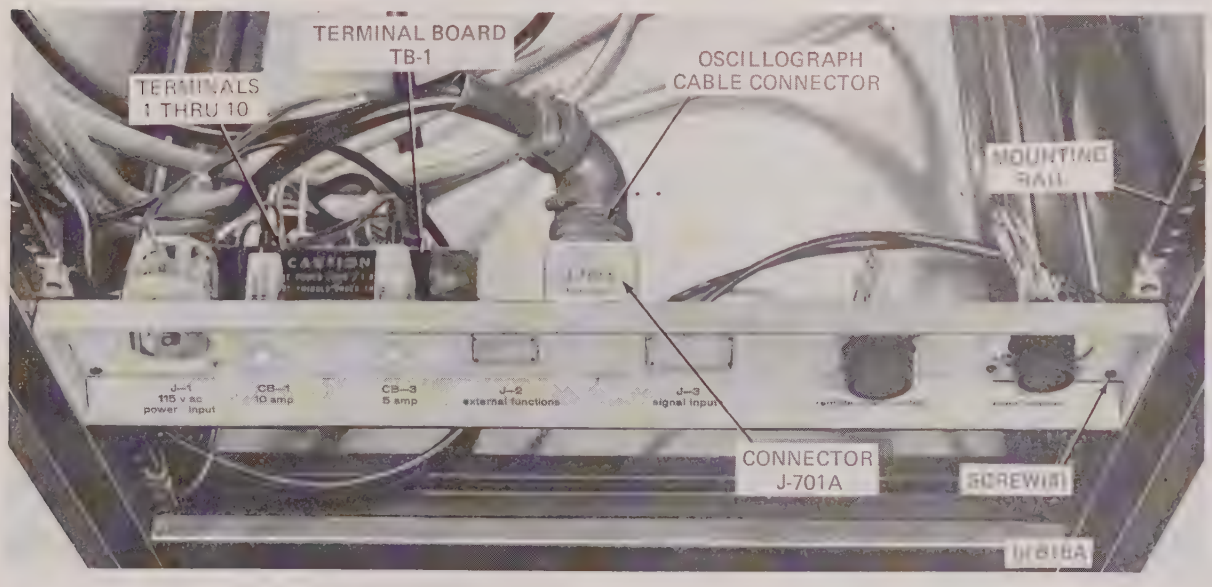

FIGURE 2-9 INSTALLATION OF SYSTEM POWER PANEL

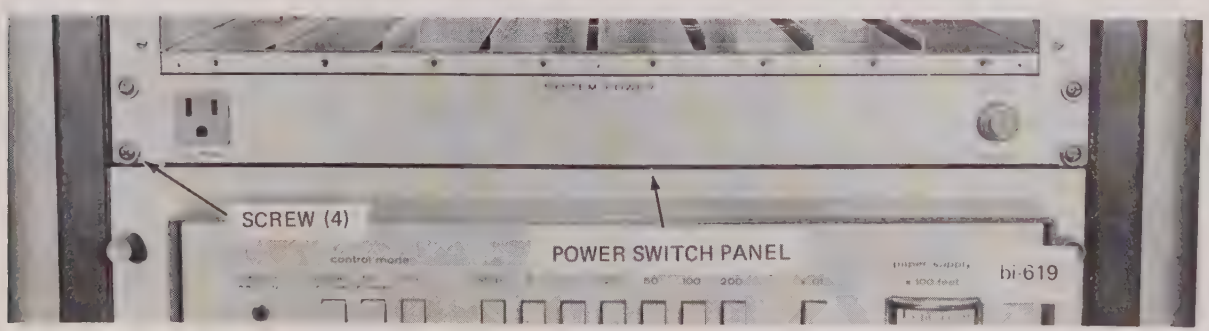

FIGURE 2-10 INSTALLATION OF SYSTEM POWER PANEL

2.7 AMPLIFIER CALIBRATION AND SYSTEM POWER ASSEMBLY INSTALLATION

1. Slide calibration unit into front of cabinet and install four screws (Fig. 2-12).

2. Position front panel on calibration unit and install two screws (Fig. 2-11).

3. Feed calibration unit leads and cable down between hanger support assemblies and sides of cabinet.

4. Secure leads and cable to sides of cabinet with clamps and screws.

5. Attach leads to terminals 1 thru 5 on terminal board TB-1 of main connector panel as follows:

Terminal Number	Wire Color	Function
1	White	Neutral power
2	Gray	Not 115 volts A.C. output
3	Yellow	Neutral power
4	Red	Hot 115 volts A.C. input
5	Green	Chassis ground

6. Position cover on TB-1 of main connector panel and install two screws and lockwashers.

7. Position calibration unit relay assembly on rear of drive frame and install two screws at connector J-701 mounting bracket (Fig. 2-13)

8. Attach leads from connectors P-721 and P-724 to terminal bords TB-181A thru TB-184A on rear of calibration unit relay assembly (Fig. 2-13).

9. Attach leads from relay assembly to terminal boards TB-181 thru TB-184 on rear of drive assembly (Fig. 2-13). Refer to wiring diagram 445000 for terminal connections.

10. Attach leads of preamplifier frame to terminal boards TB-181 thru TB-184 on rear of drive frame (Fig. 2-13). Refer to wiring diagram 469437 for terminal connections.

11. Secure preamplifier frame leads to relay assembly with four clamps and screws (Fig. 2-13).

12. Connect P-170 connector to J-170 on calibration unit relay assembly (Fig. 2-13).

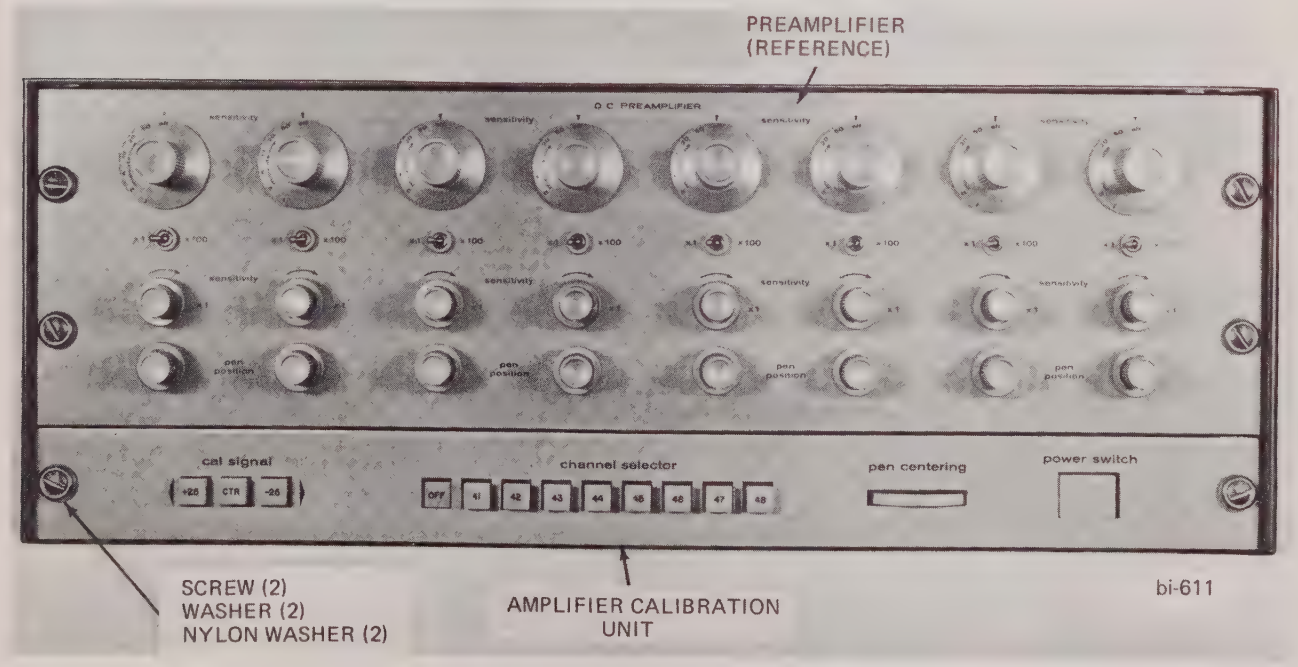

FIGURE 2-11 INSTALLATION OF AMPLIFIER CALIBRATION AND SYSTEM POWER ASSEMBLY

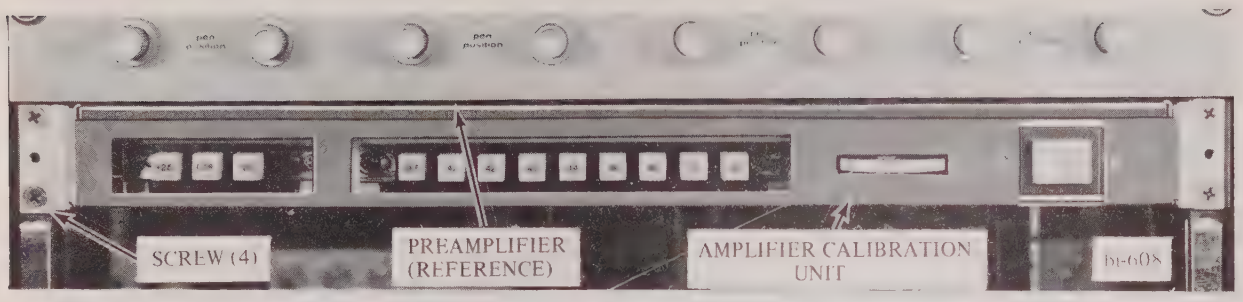

FIGURE 2-12 INSTALLATION OF AMPLIFIER CALIBRATION AND SYSTEM POWER ASSY

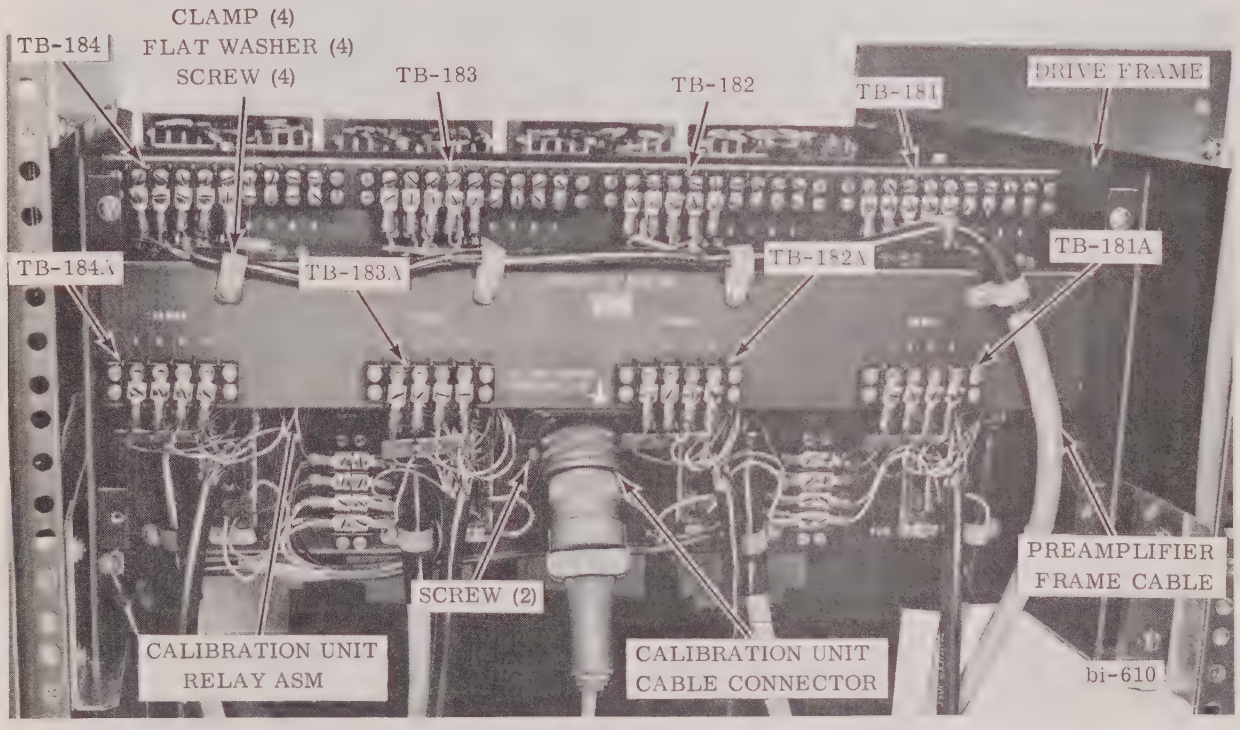

FIGURE 2-13 INSTALLATION OF AMPLIFIER CALIBRATION AND SYSTEM POWER ASSY

13. Position relay chassis assembly at rear of drive frame and install two screws (Fig. 2-14).

14. Connect power input cable to correct power source.

2.8 DRIVE AMPLIFIER FRAME AND RELAY CHASSIS ASSEMBLY INSTALLATION

1. Slide drive frame into unit.

2. Secure drive frame to unit with four screws (Fig. 2-15).

3. Position panel shims on each side of drive frame at front of unit and secure with two screws (Fig. 2-15).

4. Position four amplifier harness connectors at P-721 thru P-724 on rear of drive frame and attach each connector with two screws (Fig. 2-16).

5. Attach leads to terminal boards TB-181 thru TB-186. Refer to wiring diagram 461599 in the schematics section.

6. Attach preamplifier frame leads to terminal boards TB-181 thru TB-184. Refer to preamplifier frame wiring diagram 469437.

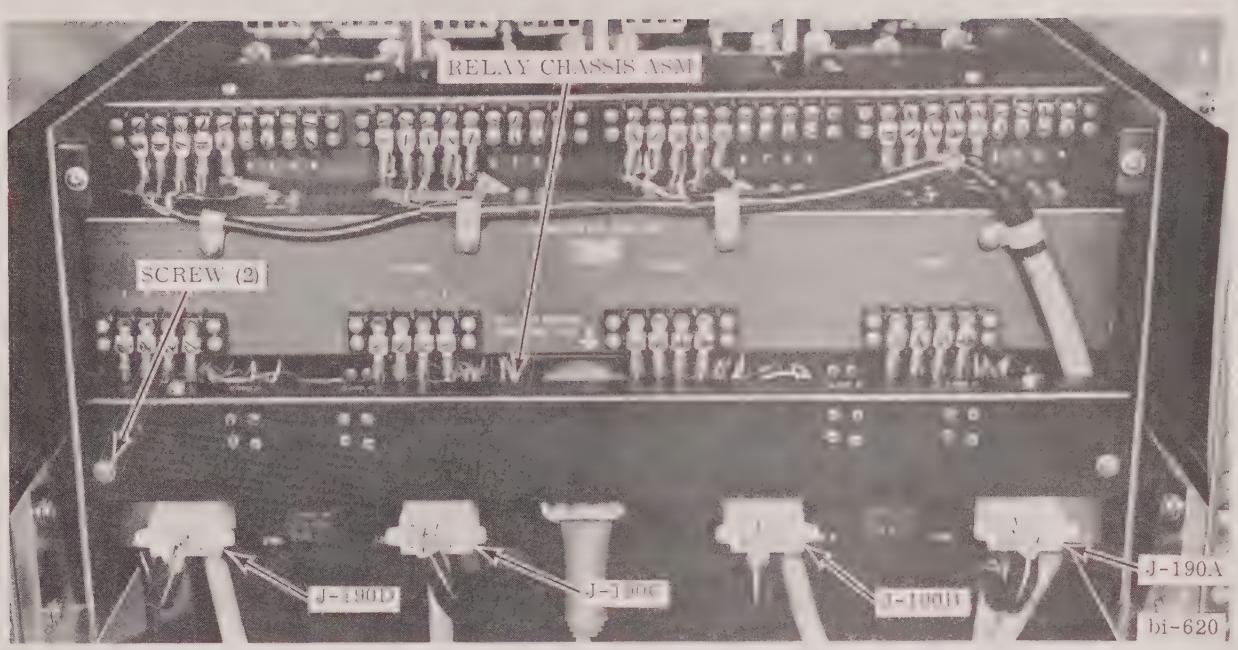

FIGURE 2-14 INSTALLATION OF AMPLIFIER CALIBRATION AND SYSTEM POWER ASSEMBLY

7. Secure all leads and calbes to drive frame with clamps (Fig. 2-16).

8. Position relay chassis assembly on rear of drive frame and install two screws (Fig. 2-14).

9. Install four plugs into J-190A thru J-190D on relay chassis assembly (Fig. 2-14).

10. Position dust cover on locating screws at rear of drive frame and install two screws.

NOTE: If penmotor and oscillograph cables were disconnected during removal, attach cables to side of unit with clamp and screw.

11. Install drive amplifiers into frame.

NOTE: Drive amplifiers are keyed to rear alignment pin and will only engage connector if in proper alignment.

12. Position cover plate on front of drive assembly and secure with four screws (Fig. 2-15).

13. Connect system power input cable to correct power source.

2.9 INSTALLATION OF PREAMPLIFIER FRAME

1. Feed leads thru opening in cabinet and slide preamplifier frame into place.

2. Attach frame to cabinet with four screws.

3. Feed leads down between hanger support assemblies and sides of cabinet.

4. Connect preamplifier frame leads to terminal boards TB-181 thru TB-184 on rear of drive amplifier frame.

5. Secure leads to four spacers on rear of drive frame with clamps and screws (Fig. 2-16).

6. Attach leads to side of drive frame with clamp and screw.

7. Slide power supply fanning strip under screws on terminal board TB-1 at rear of preamplifier frame and tighten 12 screws.

8. Close cover on rear of preamplifier frame and tighten screws on top of cover.

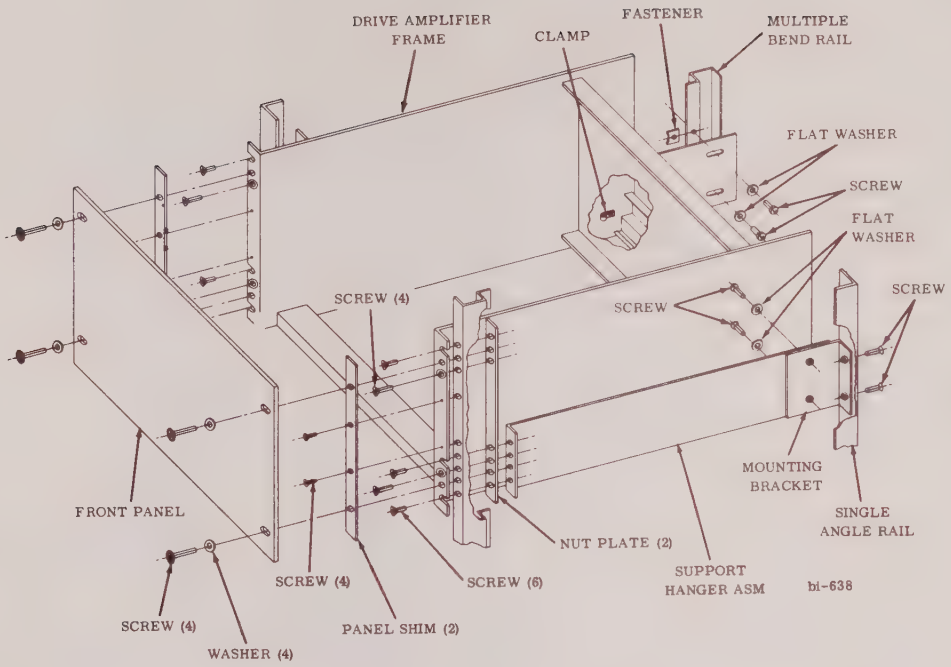

FIGURE 2-15 INSTALLATION OF DRIVE AMPLIFIER FRAME

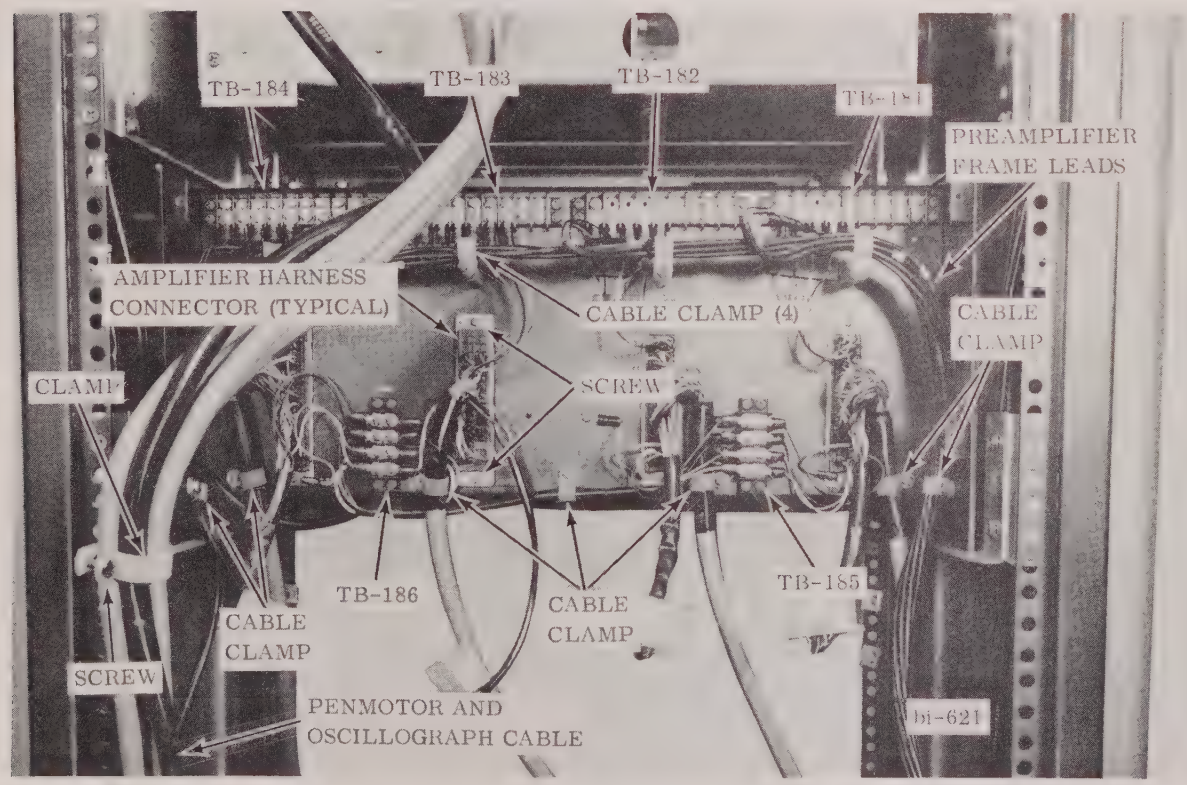

FIGURE 2-16 INSTALLATION OF DRIVE AMPLIFIER FRAME

REVISIONS			
SYM	DESCRIPTION	DATE	APPROVAL

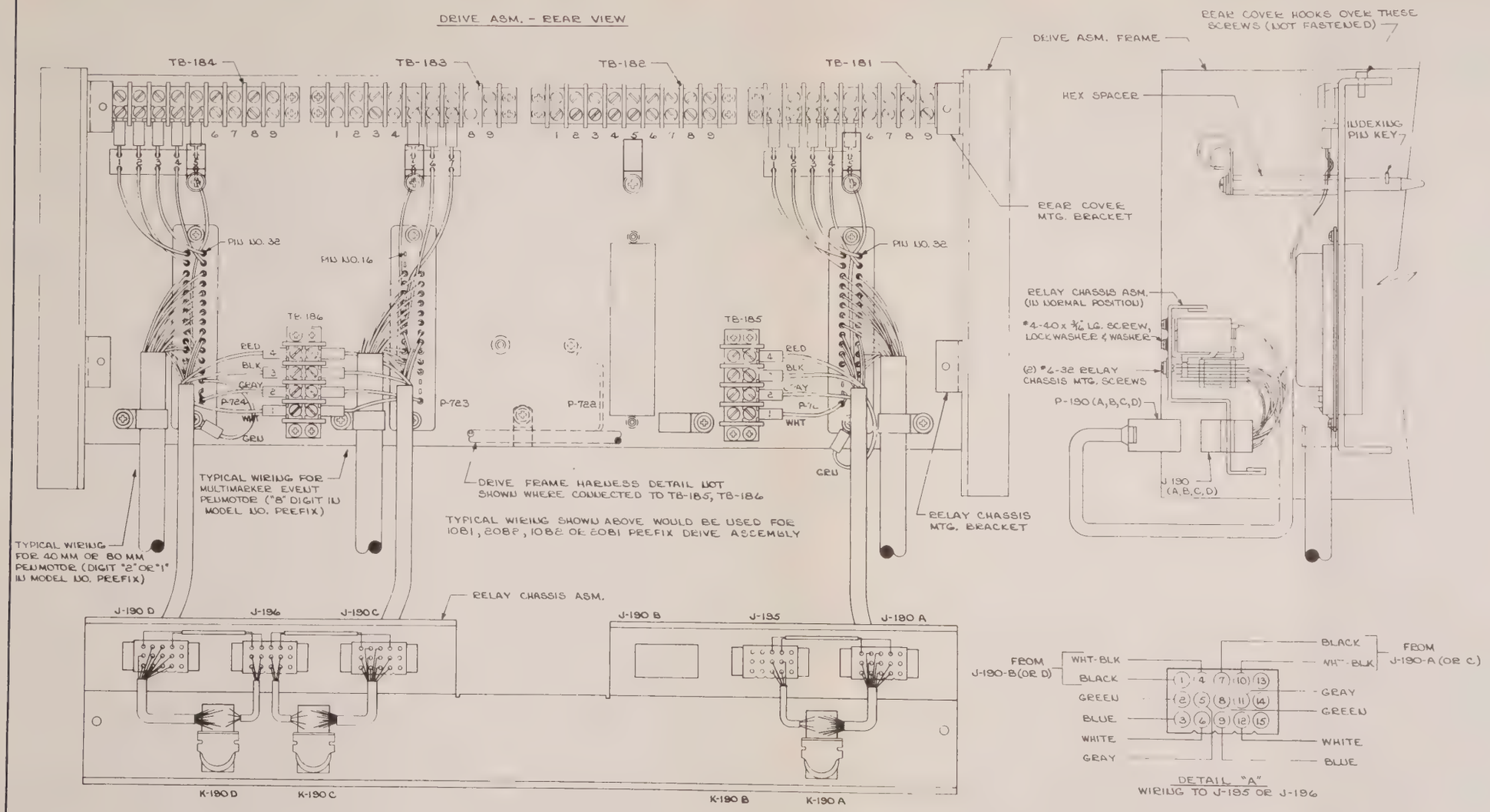

DETAIL "A"
WIRING TO J-195 OR J-196

REQD	ITEM	PART NUMBER	DESCRIPTION	REMARKS	CRL
			LIST OF MATERIAL		

11-2292-00	UNLESS OTHERWISE SPECIFIED: DIMENSIONS ARE IN INCHES; TOLERANCES ANGLES ± ½°, XX = ± .01, XXX = ± .005, SURFACE = √	BY / DATE	NAME: INSTRUCTIONS, INSTALLATION AMPLIFIER & HARNESS KIT	
	MATL	DR JORDAK 5-24-65		
		CH		
		APP Jefferson 5/26/65		
	ADD FIN.		CODE IDENT / ISSUE CODE G	DWG. NO. 461599
FIRST USE			SCALE 1/1	

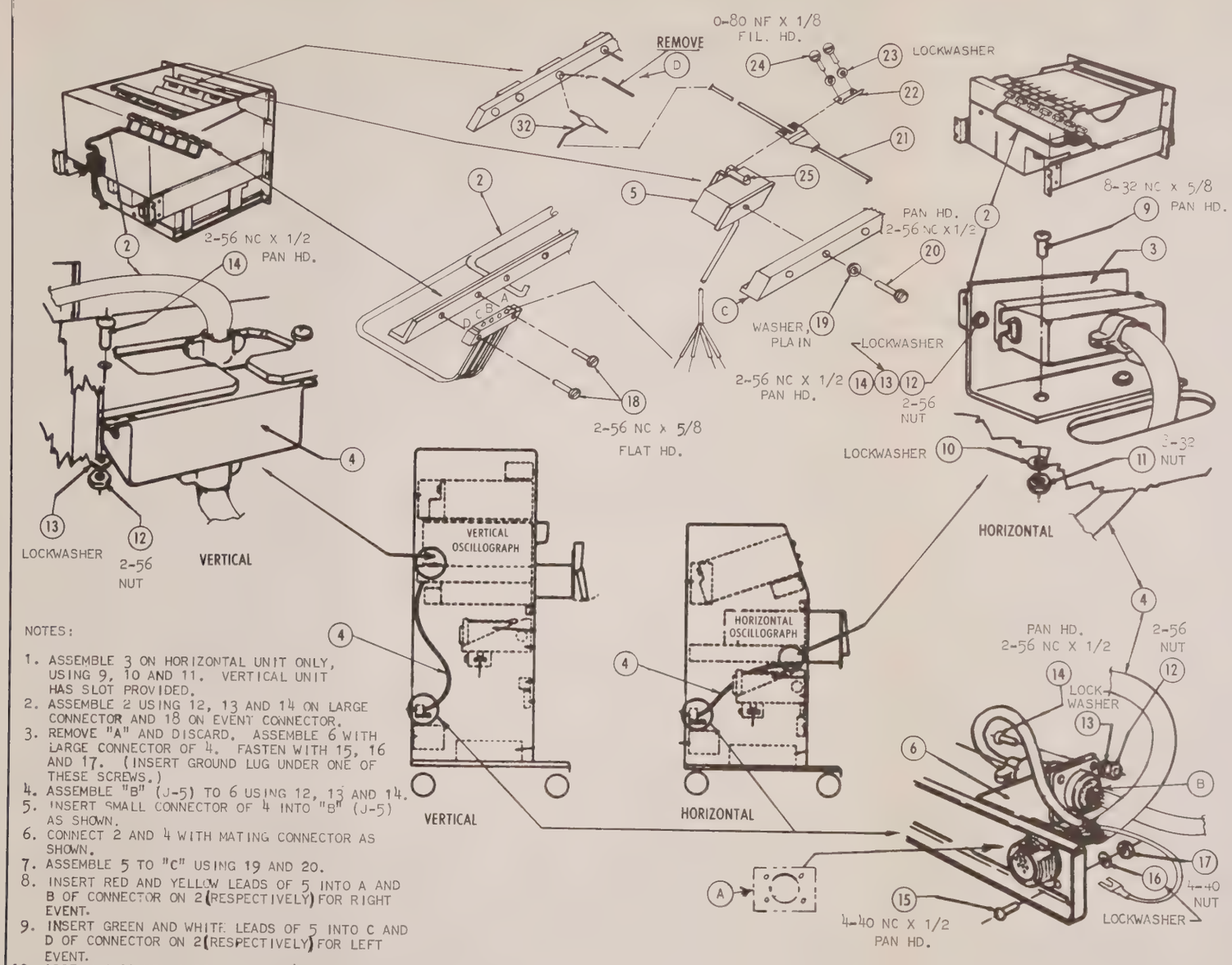

NOTES:

1. ASSEMBLE 3 ON HORIZONTAL UNIT ONLY, USING 9, 10 AND 11. VERTICAL UNIT HAS SLOT PROVIDED.
2. ASSEMBLE 2 USING 12, 13 AND 14 ON LARGE CONNECTOR AND 18 ON EVENT CONNECTOR.
3. REMOVE "A" AND DISCARD. ASSEMBLE 6 WITH LARGE CONNECTOR OF 4. FASTEN WITH 15, 16 AND 17. (INSERT GROUND LUG UNDER ONE OF THESE SCREWS.)
4. ASSEMBLE "B" (J-5) TO 6 USING 12, 13 AND 14.
5. INSERT SMALL CONNECTOR OF 4 INTO "B" (J-5) AS SHOWN.
6. CONNECT 2 AND 4 WITH MATING CONNECTOR AS SHOWN.
7. ASSEMBLE 5 TO "C" USING 19 AND 20.
8. INSERT RED AND YELLOW LEADS OF 5 INTO A AND B OF CONNECTOR ON 2 (RESPECTIVELY) FOR RIGHT EVENT.
9. INSERT GREEN AND WHITE LEADS OF 5 INTO C AND D OF CONNECTOR ON 2 (RESPECTIVELY) FOR LEFT EVENT.
10. ASSEMBLE 21 USING 22, 23 AND 24.
11. REMOVE "D" FROM MANIFOLD, INSERT 32.
12. REPLACE PEN TUBE ON 32 AND INSERT PEN TUBE OF 21 ON 32 AS SHOWN.
13. ADJUST PEN PRESSURE OF 21 USING 25. VERTICAL PEN PRESSURE TO BE 20 TO 22 GRAMS. IF TRACE DENSITY VARIES, LAP PENS.
14. (SEE 26) MATE FOR CONNECTOR BRUSH PART NO. 241966 USED ON 4.
15. REMOVE LABELS ("E1" THRU "E5") PARTS OF ITEMS-5, USE ITEMS-34 AS REQUIRED.

Information contained herein is considered proprietary to **GOULD INC., INSTRUMENT SYSTEMS DIVISION.** Release of this information is to facilitate the servicing and maintenance of Gould equipment only.

Under no circumstances shall this information be transmitted, reproduced, disclosed to, or used by any person or organization other than those engaged in such activities without the express written consent of **GOULD INC., INSTRUMENT SYSTEMS DIVISION**

Gould Inc.
Instrument Systems Division
Cleveland, Ohio 44114 U.S.A.

ITEM	PART NUMBER	DESCRIPTION	REMARKS	QMT
34	348518-11	LABELS, IDENT.	USE WITH ITEMS #5 P.C.O.	1
33	262388	DIAGRAM, WIRING		1
32	662095	TUBE ASSEMBLY	1 EACH WITH ITEM #5 P.C.O.	X
31	222641	CARD, WARRANTY		1
30	222640	CARD, CONCEALED DAMAGE		1
29	118259-12	BUSHING, CABLE CLAMP	USED WITH ITEM #26	1
28	118259-16	BUSHING, CABLE CLAMP	USED WITH ITEM #26	1
27	119993-116	CLAMP, CABLE	USED WITH ITEM #26	1
26	241965	CONNECTOR	SEE NOTE #14	1
25	241073-1202	SCREW	PART OF ITEM #5	X
24	20-119917-0002	SCREW	PART OF ITEM #5	X
23	128777-102	LOCKWASHER	PART OF ITEM #5	X
22	241855	STRAP, PEN MOUNTING	PART OF ITEM #5	X
21	341857-915	PEN ASSEMBLY, INK	PART OF ITEM #5	X
20	31-119914-2600	SCREW	PART OF ITEM #5	X
19	1-218195-303	WASHER, PLAIN	PART OF ITEM #5	X
18	31-119920-2606	SCREW		1
17	31-119998-40	NUT		4
16	1-216741-411	LOCKWASHER		4
15	31-119918-4008	SCREW		4
14	31-119918-2608	SCREW		6
13	1-216741-401	LOCKWASHER		6
12	31-119998-26	NUT		6
11	31-119998-82	NUT		2
10	1-216741-425	LOCKWASHER		2
9	31-119918-8210	SCREW		2
8				
7				
6	341999	BRACKET, CONNECTOR	PART OF ITEM #1	X
5	11-2222-00	KIT ASM. EVENT MARKER	P. C. O.	X
4	862173	CABLE ASM.	PART OF ITEM #1	X
3	341988	BRACKET, CONNECTOR	PART OF ITEM #1	X
2	862172	CABLE ASM.	PART OF ITEM #1	X
1	11-2221-00	KIT ASM. (7) CABLE		1

LIST OF MATERIAL

UNLESS OTHERWISE SPECIFIED: DIMENSIONS ARE IN INCHES; TOLERANCES: XX = ±.015, XXX = ±.005, ANGLES = ±½°, SURFACE = √; MATL.; ADD FIN.; FIRST USE

BY: DR. LJW/GB 8/17/65; CH. L.W. 8/17/65; APP. Stalmark 9/1/65; DATE

NAME: SHIPPING LIST AND INSTALLATION INSTRUCTIONS

CODE IDENT. 06795; ISSUE CODE G; DWG. NO. 262553; SCALE

9. Position dust cover on rear of drive frame and install two screws.

NOTE: If oscillograph and penmotor cable clamp was disconnected when dust cover was removed, attach cables to side of unit with clamp and screw.

10. Connect signal input leads to rear of preamplifier frame.

11. Slide 4200 series preamplifiers into frame.

12. Connect power input cable to correct power source.

2.10 CHART TAKE-UP INSTALLATIONS

a. Model 11-2231-01

NOTE: Take-up kit can be installed in an oscillograph already installed in a rack or cabinet, provided rear of oscillograph is accessible.

1. Open bezel lock and pull paper drawer out as far as possible.

2. Hold spacer behind pulley housing assembly and attach housing assembly to left side of paper drawer with three screws.

CAUTION: Check to be sure straigt pin in pulley shaft clears side plate hole when pulley is rotated. Apply locktite to threads of screws and tighten.

3. Refer to Detail A in Figure 2-17 and attach motor and bracket assembly to rear of paper drawer using two screws, flat washers, lock washers and nuts.

4. Install grommet in rear of paper drawer and feed motor leads thru grommet. Place belt over motor and drive pulleys and check belt tension. Adjust belt tension, if required, by loosening three screws on side of motor bracket and positioning motor so center of belt can be depressed apprxoimately 1/2-inch with firm finger pressure (five pound). Tighten screws. (Detail C, Fig 2-17).

5. Remove two countersunk screws from side of paper drawer and remove rod (if installed) extending across bottom of paper drawer (located approximately 6-1/2 inches from front of side plates). Rod and screws will not be used.

6. Remove screw, lockwasher, flat washer and shim securing spring and lever to arm assembly. Insert lever end of arm assembly thru left side plate. Spring side of paper drawer slightly to allow right end of arm assembly to be seated.

7. Place lever and spring over D-shaped shaft and secure using screw, lockwasher, flat washer, and shim removed in step 6.

8. Remove four flat-head screws which attach left slide to paper drawer.

9. Slide center arm of slide back to allow access to JOG switch and take-up switch mounting area.

10. Mount JOG switch to top of paper drawer. (C, Fig. 2-17).

11. Thread take-up switch and paper supply sensing leads thru clamp and attach take-up bracket and clamp to side of paper drawer using screws, lockwasher, and flat washers. (C, Fig. 2-17).

12. Tighten pivot pin then back off 1/8-turn.

13. Depress take-up bracket and tighten clamp screw. (C, Fig. 2-17).

14. Attach left slide to paper drawer using four flat-head screws removed in step 8.

15. Attach motor leads to terminal board TB-703 at terminals 18 and 19.

16. Attach JOG switch leads to terminal board TB-703 as follows:

LEAD (Color)	TERMINAL
Brown/White	16
White/Brown/Yellow	17
White/Red	19 (with motor lead)

17. Install paper core on rewind shaft assembly and install in paper drawer.

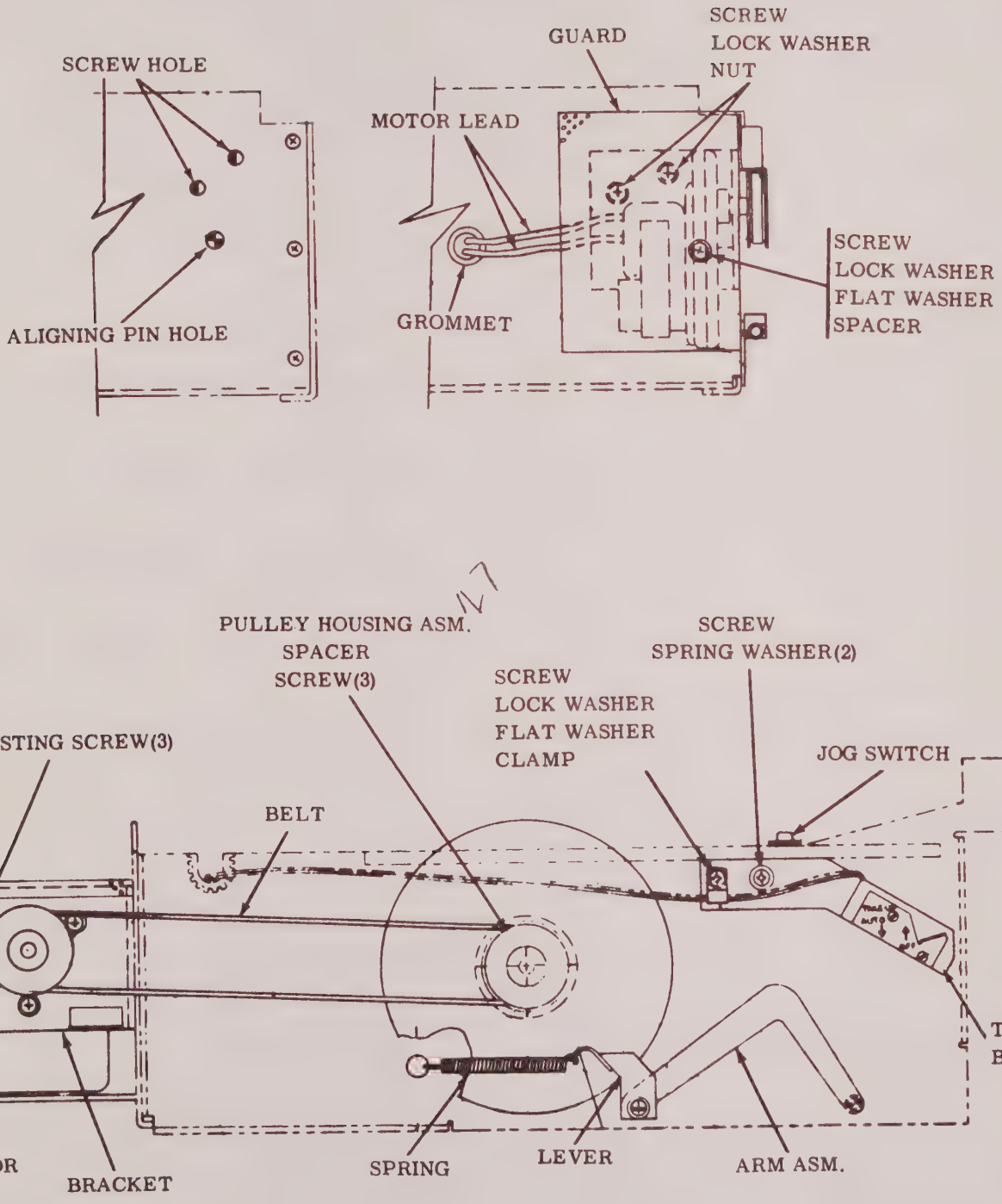

FIGURE 2-17 INSTALLATION OF INTERNAL CHART TAKEUP MODEL 11-2231-01

NOTE: Check to be sure rewind shaft engages straight pin in drive pulley shaft.

b. Models 11-2402-41 & 11-2402-61

The Short Run External Chart Takeup, Model 11-2402-61, and Extended Run External Chart Takeup, Model 11-2402-41, use the following installation procedure.

1. Press both release levers and pull oscillograph out as far as possible.
2. Remove two screws from plugs on left and right side of bezel and remove plugs.
3. Remove two screws from top front of control panel.
4. Pull control panel slightly away from bezel, but do not remove.
5. Slide chart takeup supports thru the bezel openings and align notch and holes in supports with holes in oscillograph side plates.

NOTE: Keep cable over top of right support during installation.

6. Secure chart takeup to oscillograph with four screws supplied with takeup.
7. Pull out control panel far enough to gain access to connector.
8. Plug motor assembly connector into connector on inside of control panel.
9. Install control panel and secure with two screws remvoed in step 3.
10. Place shaft assembly into the support assembly.

NOTE: The following procedure applies only to Model 11-2402-41.

11. Check that paper clears left hub (approximately 1/32 inch clearance is adequate).
12. If the chart paper does not have the proper clearance the left hub must be adjusted to accommodate the paper as follows:
    a. Loosen two set screws in the spring stop.

NOTE: DO NOT loosen set screws in stop.

    b. Grasp the left hub firmly and rotate the stop and shaft until the hole in the collar of the left hub is aligned with the set screw.
    c. Loosen set screw with an Allen wrench and leave wrench in position.
    d. Rotate the stop and shaft until the proper adjustment is reached. (Clockwise moves the hub to the left right; counterclockwise moves the hub to the left.
    e. Tighten set screw and remove wrench.
    f. Tighten set screws in spring stop.
13. Remove hub and shaft assembly from unit.
14. Place paper core onto shaft and twist paper core counterclockwise until core is against hub.
15. Place right hub onto shaft and twist screw until core is against hub.
16. Position assemlby on chart takeup.
17. Check paper clearned at right hub (approximately 1/32 inch clearance is adequate).
18. If adjustment is necessary, grasp the paper core and twist the right hub screw until the proper clearance is obtained.
19. Attach the chart paper to the core.

c. Model 11-2402-51

The external chart take-up kit 11-2402-51 is installed with the following procedure and is shown in Figure 2-19.

1. Turn off instrument.
2. Release bezel lock and pull out writing drawer.
3. Remove two set screws from pulley.
4. Install teflon pulley onto pulley hub.
5. Align holes in teflon pulley with holes in hub and install two set screws supplied with kit.

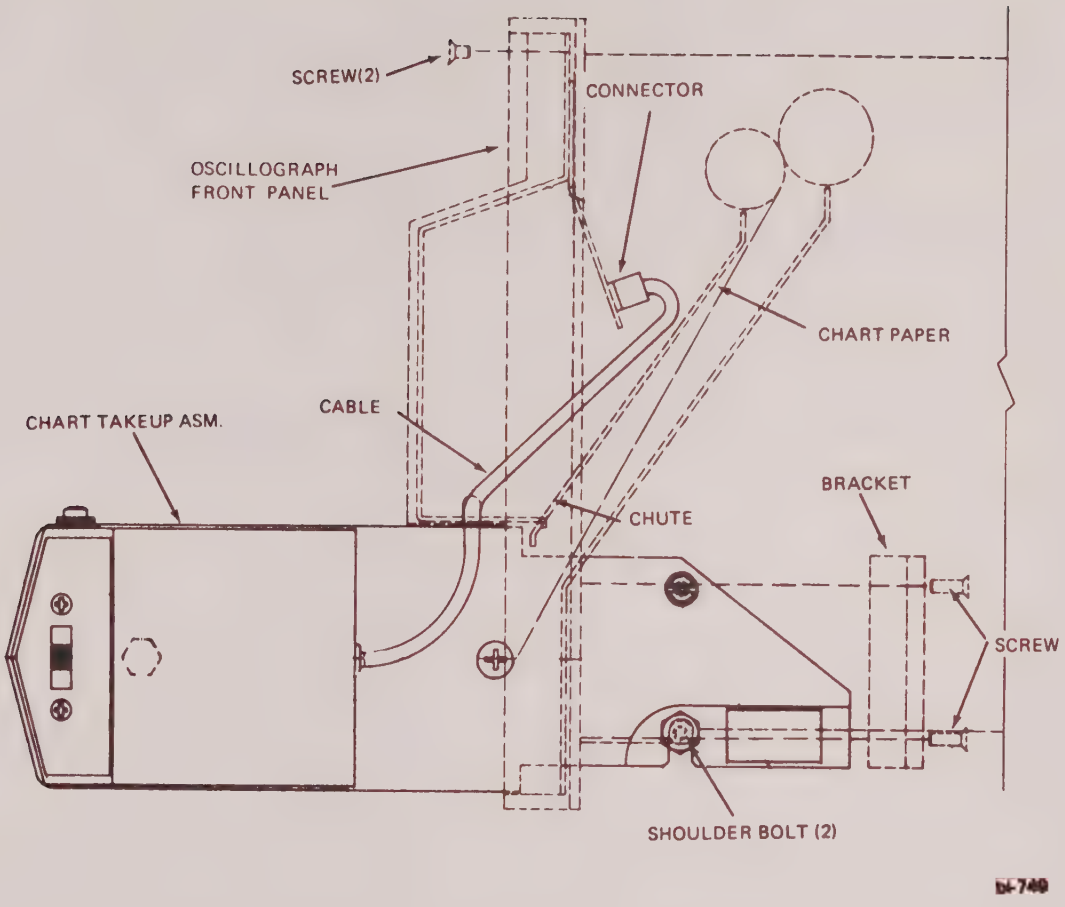

FIGURE 2-18 INSTALLATION OF TAKE-UP KIT MODELS 11-2402-41 AND 11-2402-61

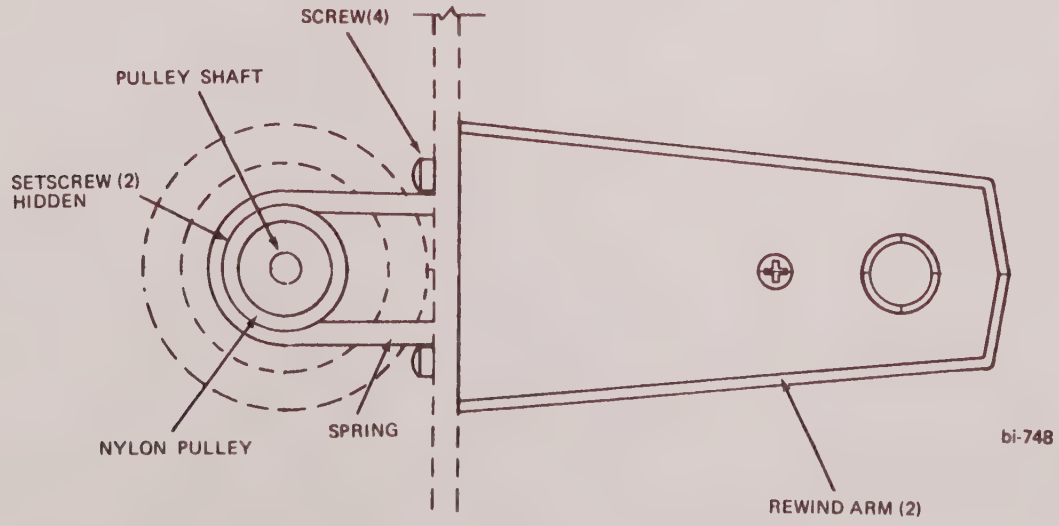

FIGURE 2-19 INSTALLATION OF TAKE-UP MODEL 11-2402-51

8. Attach takeup arm to front panel with two filister-head screws supplied with kit.

9. Align right takeup arm with two holes in front panel and attach with two flat-head screws.

10. Stretch spring belt, attached to left arm assembly, over teflon pulley.

11. Pull out spring loaded locking knob on left arm assembly.

12. Place takeup shaft between arm assemblies and lock into position by rotating shaft to align with pins on locking knob and release knob.

13. Slide writing drawer into unit and engage bezel lock.

14. Run thru enough paper to start paper around takeup shaft. Be certain paper is snug around shaft.

NOTE: Do not attach paper to takeup shaft with tape or other adhesive.

Unit is now ready for operation.

SECTION III

OPERATION

3.1 GENERAL

This section describes and illustrates the operation of the Gould 200 recording system and its various components. It also contains instructions for preliminary checks of the system prior to normal operation.

3.2 PREAMPLIFIERS, 4100, 4200, and 4400 SERIES

The preamplifiers used in the 1707 system are all solid state units, designed to combine compactness with extreme fidelity, stability and input security. Controls are simple, easy to see, and positive in settings. A complete description of the preamplifier(s) used in this particular system is contained in the preamplifier manual behind this manual.

3.3 OSICLLOGRAPH CONTROL DESCRIPTION

a. Vertical Oscillograph

The circled numbers in Figure 3-1 correspond with the items listed on the following page.

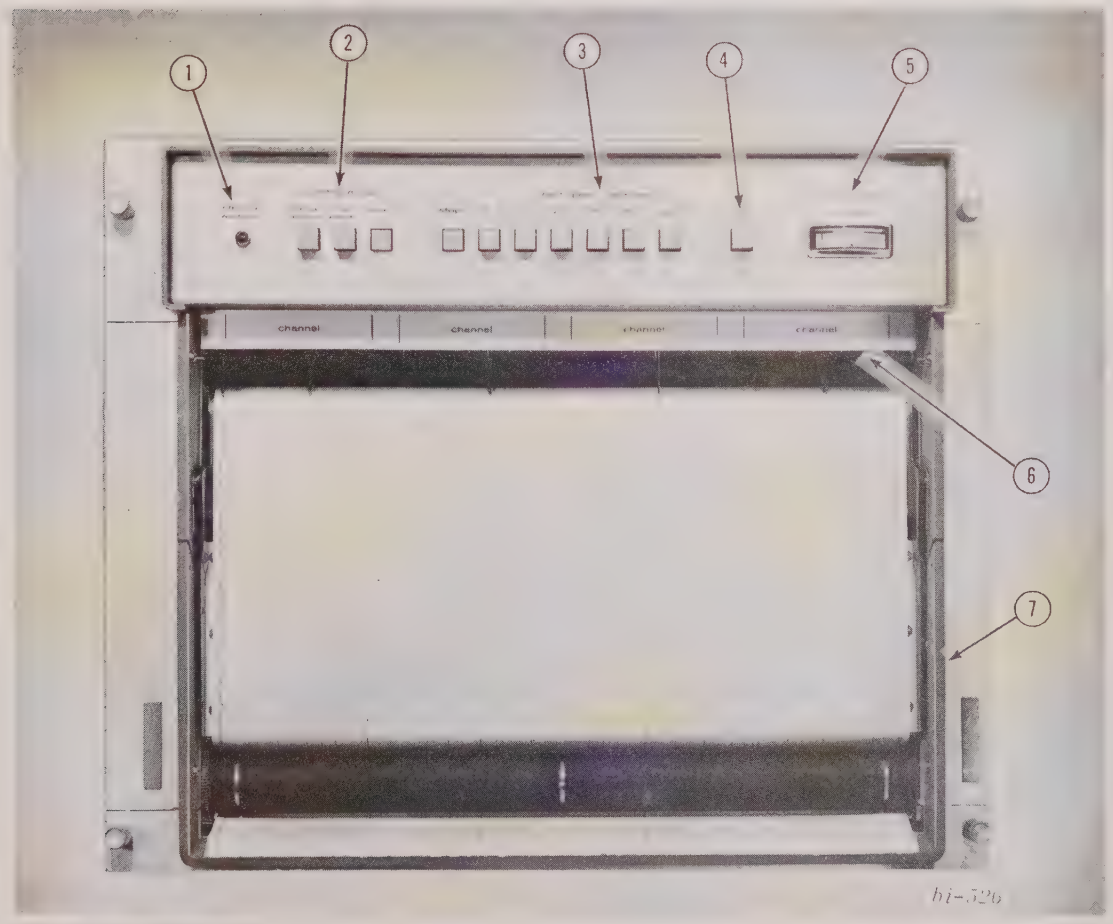

FIGURE 3-1 VERTICAL OSCILLOGRAPH FRONT PANEL CONTROLS

1 Interlock Warning Light .....

The interlock warning light is controlled by an interlock switch located in the paper supply drawer. When warning light is illuminated, it indicates an open interlock switch due to an empty paper supply roll or the bezel lock not being engaged.

NOTE: The oscillograph will not operate when the warning light is illuminated.

2 Control Mode .....

The control mode is a three-position switch with the following functions:

a. Partial Remote – When PARTIAL REMOTE button is depressed, chart drive ON–OFF control is transferred to a remote location thru connector J-4. Chart speed control remains at the oscillograph.

b. Full Remote – When FULL REMOTE button is depressed, all chart speed control is transferred to the remote location thru J-4.

c. Local – When LOCAL button is depressed, full control is at the oscillograph.

3 Chart Speed mm/sec .....

The chart speed mm/sec is a seven-position switch with the following functions:

a. Stop Button – Depressing STOP button stops chart drive operation and turns off power to pens.

b. Chart Speed Buttons – One for each speed, marked 5, 10, 20, 50, 100 and 200 mm/sec. Button depressed indicates chart drive speed.

NOTE: Depressing any of the chart speed buttons releases the STOP button and turns on chart drive motor.

4 X.01 Button .....

When X.01 button is depressed, chart speeds of 5, 10, 20, 50, 100, and 200 mm/sec are multiplied by .01 and become .05, .1, .2, .5, 1 and 2 mm/sec.

5 Paper Supply X100 Feet .....

The paper supply X100 feet indicator provides a quick reading of the amount of paper remaining on supply roll shaft. The dial is in increments from zero to 1000 feet and is set by means of an adjusting screw on right side of oscillograph.

6 Channel Identification Strips .....

A channel identification strip is provided for each penmotor. The channels are numbered from left to right as follows:

a. 80mm Penmotor– These channels are numbered 81, 82, 83 and 84.

b. 40 mm Penmotor— The numbers for these dual channel penmotors are 41-42, 43-44, 45-46, and 47-48.

c. Multimarker Penmotor— These are numbered in groups of eight; 1 thru 8, 9 thru 16, 17 thru 24, and 25 thru 32.

d. In a position where there is no penmotor (zero position), a blank strip is provided.

NOTE: The numbered channels correspond to the markings on universal chart paper 11-2953-50.

e. Event Marker— These are marked E-1 thru E-9 to denote nine possible event marker positions. They are only placed in positions which actually have an event marker unit.

7 Bezel Lock ..... The Bezel Lock locks the paper supply drawer into the oscillograph. It is attached to the writing bar and pressure roller. The oscillograph will not operate unless the bezel lock is in closed position.

8 Event Marker Switches

The two five-position event marker switches, which are mounted inside the oscillograph, function as follows:

a. 1 Sec — When switch is in 1 SEC position, pen deflects in one direction every second and in the opposite direction every tenth second.

b. 10 Sec — When switch is in 10 SEC position, pen deflects in one direction every 10 seonds.

c. Off — When switch is in OFF position, event marker does not operate.

d. Ext — When switch is in EXT position, event marker is connected to terminals on connector J-5 on rear panel so that external marker signals may be used.

e. Aux — When switch is in AUX position and with optional auxiliary kit installed, pen deflects 10 times per second.

b. Horizontal Oscillograph

The circled numbers in Figure 3-2 correspond with the items listed below.

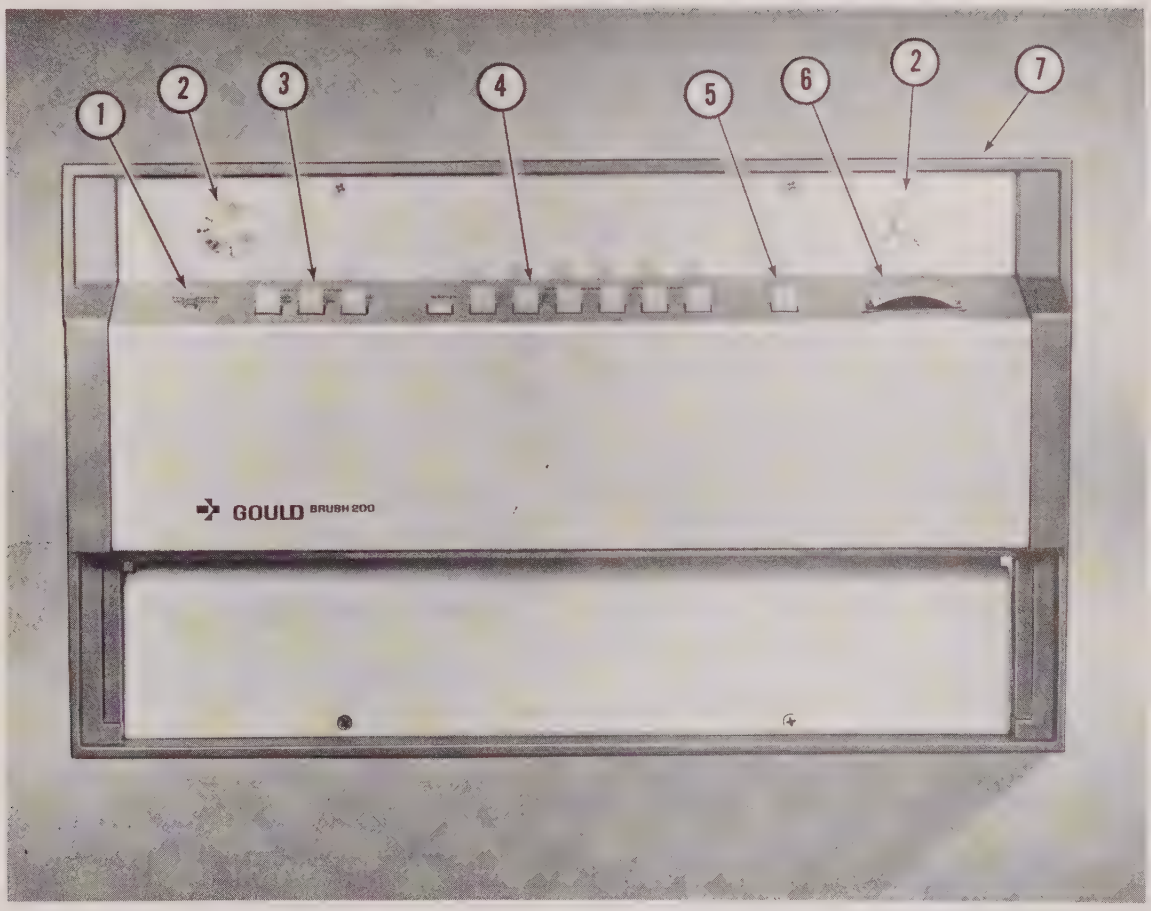

FIGURE 3-2 HORIZONTAL OSCILLOGRAPH CONTROL PANEL CONTROLS

1 Interlock Warning Light . . . . . The interlock warning light is controlled by two switches; one located beneath the writing table and the other located on the paper supply arm assembly. When warning light is illumianted, it indicates that one, or both, of the interlock switches are open due to an empty paper supply roll or the writing table not locked in position.

NOTE: The oscillograph will not operate when the warning light is illuminated.

2 Event Marker Switches . . . . . The two five-position event marker switches function as follows:

a. 1 Sec — When switch is in 1 SEC position, pen defelcts to the left every second and to the right every ten seconds.

b. 10 Sec – When switch is in 10 SEC position, pen deflects to the right every 10 seconds.

NOTE: The ten second interval may be changed to 20, 30 or 60 seconds by an internal adjustment of the standard "multi-choice" timer. Refer to Paragraph 6.14 in the Maintenance Section for setting timer instructions.

c. Off – When switch is in OFF position, event marker does not operate.

d. Ext – When switch is in EXT position both coils of event markers are connected to terminals on connector J-2 on main connector panel so that external marker signals may be used.

e. Aux – When switch is in AUX position and with optional auxiliary kit installed, either pen deflects 9 times per second to the right and once per second to the left.

3 Control Mode . . . . . (Buttons illuminate when pushed)

The control mode is selected by a three-position switch with the following functions:

a. Partial Remote – When PARTIAL REMOTE button is depressed, chart drive ON–OFF control is transferred to a remote location thru connector J-4 on main connector panel. Chart speed control remains at the oscillograph.

b. Full Remote – When FULL REMOTE button is depressed, all chart speed control is transferred to the remote location thru connector J-4 on main connector panel.

c. Local – When LOCAL button is depressed, full control is at the oscillograph.

4 Chart Speed mm/sec . . . . . (Buttons illuminate when pushed)

The chart speed is selected by a seven-position switch with the following functions:

a. Stop Button – Depressing STOP button stops chart drive operation and turns off power to pens.

b. Chart Speed Buttons – One for each speed, marked 5, 10, 20, 50, 100 and 200. Button depressed indicates chart drive speed.

NOTE: Depressing any of the chart speed buttons releases the STOP button and turns on chart drive motor.

5	X.01 Button . . . . . (Illuminates in the .01 position)	When X.01 button is depressed, chart speeds of 5, 10, 20, 50, 100 and 200 mm/sec are multiplied by .01 and become .05, .1, .2, .5, 1 and 2 mm/sec.
6	Paper Supply X100 Feet	The paper supply X100 feet indicator provides a quick reading of the amount of paper remaining on supply roll shaft. The dial is in increments from zero to 1000 feet and is set by means of an adjusting screw on right side of oscillograph.
7	Channel Indentification Strips	A channel identification strip is provided for each penmotor. The channels are numbered from left to right as follows:

a. 80 mm Penmotor —These channels are numbered 81, 82, 83 and 84.

b. 40 mm Penmotor — The numbers for these dual channel penmotors are 41-42, 43-44, 45-46, 47-48.

c. Multimarker Penmotor — These are numbered in groups of eight; 1 thru 8, 9 thru 16, 17 thru 24, and 25 thru 32.

d. In a position where there is no penmotor (zero position) a blank strip is provided.

NOTE: The numbered channels correspond with the markings on universal chart paper 11-2953-50.

e. Event Marker — These are marked E-1 thru E-9 to denote nine possible event marker positions. They are only placed in positions that actually have an event marker unit.

3.4 AMPLIFIER CALIBRATION UNIT CONTROL DESCRIPTION

The circled numbers in Figure 3-3 correspond with the items listed below.

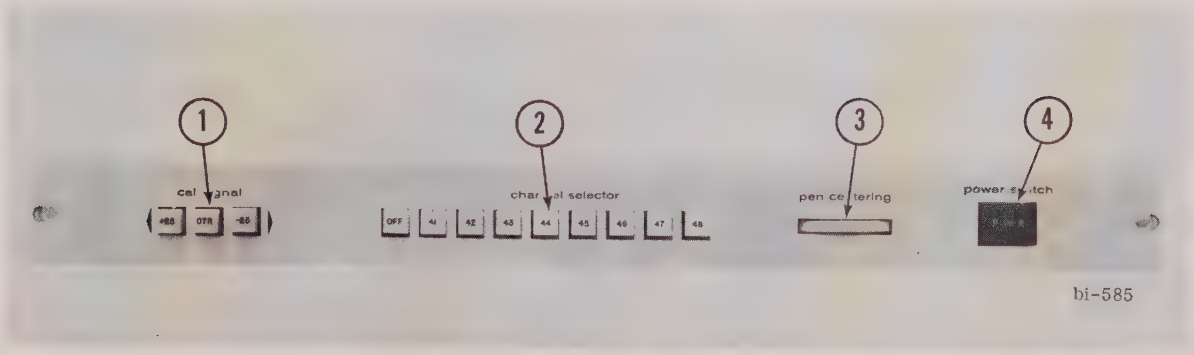

FIGURE 3-3 AMPLIFIER CALIBRATION AND SYSTEM POWER ASSEMBLY

1	Cal Signal Switch	The cal signal mode is a three-position switch with the following functions: a. -25. When switch is in the -25 position and any of the channel selector switches depressed, the pen position signal to the drive amplifier is transferred to negative signal of +2.5 volts on calibration unit. This will deflect the pen -25 divisions from the chart center. b. CTR. When switch is in CTR position and any of the channel selector switches depressed, the pen position signal to the drive amplifier is transferred to the pen centering control on calibration unit which is limited to ±3 div. around chart center. c. +25. When switch is in the +25 position and any of the channel selector switches depressed, the pen position signal to the drive amplifier is transferred to negative signal of -2.5 volts on calibration unit. This will deflect the pen +25 divisions from chart center.
2	Channel Selector	The channel selector is an 8-position pushbutton switch with each button marked for the specific channel to be checked. It is not necessary to press the OFF button when proceeding from one channel to another, only to release the last channel checked.
3	Pen Centering	This conrol is used for fine adjustment of pen centering when using amplifier calibration unit.
4	Power Switch	This pushbutton on-off switch controls power to entire unit. The pushbutton is illuminated when power is on to the unit.

3.5 OSCILLOGRAPH OPERATIONAL CHECK

NOTE: Oscillograph may be tested outside of unit.

a. Front Panel Pushbuttons

1. PARTIAL REMOTE MODE. Jumpering pins R and S on oscillograph cable connector J-701 should move chart paper at a pre-selected speed.

2. FULL REMOTE MODE. Apply +28 volts from pin R of J-701 to remote functions as brought out to pins on J-701 (refer to wiring diagrams 448345 or 448370). All chart speed control is transferred to a remote location.

3. LOCAL. Pressing local pushbutton allows full control of unit at oscillograph control panel.

4. CHART SPEED. Check to see that oscillograph operates at all speeds.

b. Event Marker Switch

Each event marker position should produce the following results:

1. EXTERNAL. This position connects event marker to external inputs on J-701. Applying 28-volts DC to input terminals will energize corresponding event marker (refer to wiring diagram 448345 or 448370).

2. OFF. This position turns off event marker.

3. 10. This position produces one event marker pulse to the right every 10 seconds.

4. 1. This position produces one event marker pulse per second. Nine left and one right every tenth second.

5. AUX. This position is used in addition to timer of optional 0.1 second pulser. Test at terminal board TB-702 by shorting terminal 4 to terminal 3 for right deflection and terminal 4 to terminal 8 for left deflection.

c. Interlock Warning Light

If unit runs out of paper or bezel is opened, light goes on and chart drive stops.

NOTE: It is permissible for interlock light to flicker on momentarily when stop button is released. Warning light will not go on when chart speed is in stop position.

3.6 PRELIMINARY OPERATION

a. General

This paragraph contains instructions for preliminary operation with the system in various configurations. Be sure to use the instructions that apply to this system.

b. Operation of System with 4100 Series Preamplifier (Pushbutton Model)

1. Be sure POWER on-off switch is in OFF position.

2. Press STOP button on oscillograph control panel.

3. Make sure power input cable is attached to connector TB-1 on main connector panel and other end connected to a power source of 105-125 volts.

4. Make sure signal input cable is attached to connector J-3 on main connector panel.

5. Connect the external function cable to connector J-2 on the main connector panel.

6. Loosen locking knbos on SENSITIVITY X1 controls and rotate controls to their full clockwise (detent) position.

7. Place all POLARITY switches in N (normal) position, if applicable.

8. Press all attenuator OFF buttons.

9. Depress LOCAL button in control mode group on oscillograph control panel.

10. Depress POWER on-off switch to turn on instrument.

11. Allow the unit fifteen minutes to warm up to permit the amplifiers to stabilize.

12. Press ZERO button located in recorder group on preamplifier.

NOTE: All pens should locate at chart center. If they do not, center pens with PEN POSITION controls.

13. Depress X.01 button on oscillograph and select a chart speed of 100 or 200 millimeters per second.

NOTE: This will move chart at one or two millimeters per second.

14. Press CHECK button located in recorder group. All pens should deflect exactly 25 chart divisions to the left from a built-in calibration source.

NOTE: If no deflection is obtained, the CAL switch located on rear panel of the preamplifier may be in EXT (external) position. Remove back cover from unit and make certain switch is in INT (internal) position.

15. If CAL switch is in INT position and 25 divisions of required accuracy is not obtained, refer to Section VII for drive amplifier calibration and the preaplifier manual for calibration.

16. Press ZERO button to return pens to chart center.

17. Press and hold IDENTIFY button and consecuvitely press volts/division buttons starting at .05. Pen should deflect 2 chart divisions for each attenuator step. Pens will return to zero

when IDENTIFY button is released.

18. Press RECORD button, adjust pen to desired zero base line, and select desired volts/division setting.

Unit is now ready for operation.

c. Operation of System with 4100 Series Preamplifier (Rotary Model)

1. Perform steps 1 thru 4 in step b above.
2. Loosen locking knobs on SENSITIVITY X1 controls.
3. Turn the SENSITIVITY X1 controls to their full clockwise (detent) position.
4. Place all POLARITY switches in N (normal) position, if applicable.
5. Turn SENSITIVITY control to OFF position.
6. Depress POWER on-off switch to turn on instrument.
7. Depress LOCAL button in control mode group on oscillograph control panel.
8. Allow the unit fifteen minutes to warm up to permit the amplifiers to stabilize.
9. Depress X.01 button on oscillograph and select a chart speed of 100 or 200 millimeters per second.

NOTE: This will move chart at one or two millimeters per second.

10. Loosen locking knobs on PEN POSITION controls.
11. Center pens with PEN POSITION controls and tighten locking knobs.
12. Turn the SENSITIVITY control to CAL position. Pen should deflect exactly 50% of full scale.
13. If required accuracy is not obtained, refer to Section VII for drive amplifier calibration and the preamplfier manual for calibration.
14. Turn SENSITIVITY control to OFF position to check that pens return to center line.
15. Repeat step 12 and check for proper pen deflection.
16. Repeat the procedure for each channel.

Unit is now ready for operation.

d. Operation of System with 4200 Series Preamplifier

NOTE: Be sure to read the operating instructions in the preamplifier manual.

1. Perform steps 1 thru 3 in step b above.
2. Attach signal input cables to preamplifier frame connectors J-1 thru J-8.

CAUTION: REFER TO THE SIGNAL CONNECTION PROCEDURE IN THE PREAMPLIFIER MANUAL TO MAKE SURE PROPER CONNECTIONS ARE MADE. FAILURE TO DO THIS CAN RESULT IN DAMAGE TO THE INSTRUMENT.

3. Turn the preamplifier ATTENUATOR controls to the OFF position.
4. Depress POWER on-off switch to turn on instrument.
5. Depress LOCAL button on oscillograph control panel.
6. Depress X.01 button on oscillograph control panel and select a chart speed of 100 or 200 millimeters per second.

NOTE: This will move chart at one or two millimeters per second.

7. Loosen locking knobs on PEN POSITION controls.
8. Center pens with PEN POSITION controls located at bottom of each preamplifier.
9. Check to see that PEN POSITION control allows pen to traverse full chart width.

Unit is now ready for operation.

e. Operation of System with 4400 Series Preamplifier

1. Perform steps 1 thru 4 in step b above.
2. Place X1-X100 switches in X100 position.
3. Loosen locking knobs on SENSITIVITY X1 controls.
4. Turn the SENSITIVITY X1 controls to their full clockwise (detent) position.
5. Turn SENSITIVITY controls to OFF positions.
6. Depress LOCAL button on oscillograph.
7. Depress POWER on-off switch to turn on instrument.
8. Depress X.01 button on oscillograph and select a chart speed of 100 or 200 millimeters per second.

NOTE: This will move chart at one or two millimeters per second.

9. Apply known voltage to preamplifier input and increase SENSITIVITY control setting to obtain pen deflection near full scale on chart paper. Pen deflection should equal SENSITIVITY control setting multiplied by setting of X1-X100 switch.
10. Repeat step 9 for each channel.

Unit is now ready for operation.

f. Operation of System with Amplifier Calibration and System Power Assembly

NOTE: The amplifier calibration unit is used with the 4200 and 4400 series preamplifiers. Be sure to read the operating instructions for the preamplifier.

1. Be sure POWER on-off switch is in OFF position.
2. Press STOP button on oscillograph control panel.
3. Make sure power input cable is attached to connector J-1 on main connector panel and other end connected to a power source of 105-125 volts.
4. Make sure signal input cable is attached on J-3 on main connector panel (4400 series preamplifier) or to J-1 thru J-8 on preamplifier frame (4200 series preamplifier).

CAUTION: Refer to the signal connection procedure in the 4200 series preamplifier manual to make sure proper connections are made. Failure to do this can result in the damage to the instrument.

5. Depress POWER on-off switch to turn on instrument.
6. Depress LOCAL button of control mode group on oscillograph control panel.
7. Depress X.01 button on oscillograph and select a chart speed of 100 or 200 millimeters per second.

NOTE: This will move chart at one or two millimeters per second.

8. Loosen locking knobs on PEN POSITION controls.
9. Center pens with PEN POSITION controls located at bottom of each preamplifier.
10. Select a channel by depressing one of the CHANNEL SELECTOR buttons on the amplifier calibration unit.
11. Recenter pen, if necessary, in channel selected with PEN CENTERING control on amplifier calibration unit.
12. Depress the CAL SIGNAL siwtch marked -25. Pen should deflect 25 divisions to the left.
13. Depress CTR button in CAL SIGNAL switch. Pen should return to chart center.
14. Depress CAL SIGNAL switch marked +25. Pen should deflect 25 divisions to right.
15. Repeat the above procedure or each channel.

System is now ready for operation.

3.7 CHART TAKE-UP OPERATION

The power switch may be placed in the HIGH or LOW position. This switch allows the chart take-up to operate when any one of the chart speed buttons is depressed.

a. When starting a rewind, the power switch should be in the LOW position. When the rewound roll approaches approximately four inches in diameter, the power switch can be placed in the HIGH position.

b. The takeup is capable of rewinding a full roll of chart paper with the power switch in the LOW position, however, the roll will become loose as it approaches its maximum diameter.

c. If a new rewind is started with the power switch in the HIGH position, the takeup may override the oscillograph and pull the paper through it, causing distortions in the recording. In the event this happens, the power switch should be placed in the LOW position.

The pushbutton switch operates the chart takeup when power is ON to the oscillograph.

When the chart paper is to be reviewed, place the power switch in the OFF position. This will render the chart takeup inoperative but the oscillograph will still play out chart paper. When the reviewing has been completed, press the pushbutton switch and the chart takeup will reel in all the slack.

SECTION IV

THEORY OF OPERATION

4.1 GENERAL

The Mark 200, 1707 Series Recorder (Fig.2-1) is an 8-channel module-type solid-state system, consisting of preamplifier, drive amplifiers, and oscillograph, interconnected thru the main connector panel. The recorder incorporates an effective servo-controlled position feedback system, high-torque penmotors, and pressurized fluid writing.

The input to each channel, thru the preamplifier is single-ended and all eight outputs are single-ended and grounded, terminating at the penmotor drive amplifier.

The penmotor drive amplifier is a complete servo-type system utilizing a Metrisite transducer in the penmotor to develop position and electronically derive velocity and acceleration signals. These signals are summed with an input signal in a D.C. error amplifier that supplies power for driving the oscillographic penmotor.

The penmotors connect electrical signals to the mechanical pen which records thru a balanced hydrostatic ink system on chart paper. The chart, which is contained in the oscillograph, is driven past the pens by an electrically actuated transmission and stored on an external chart takeup.

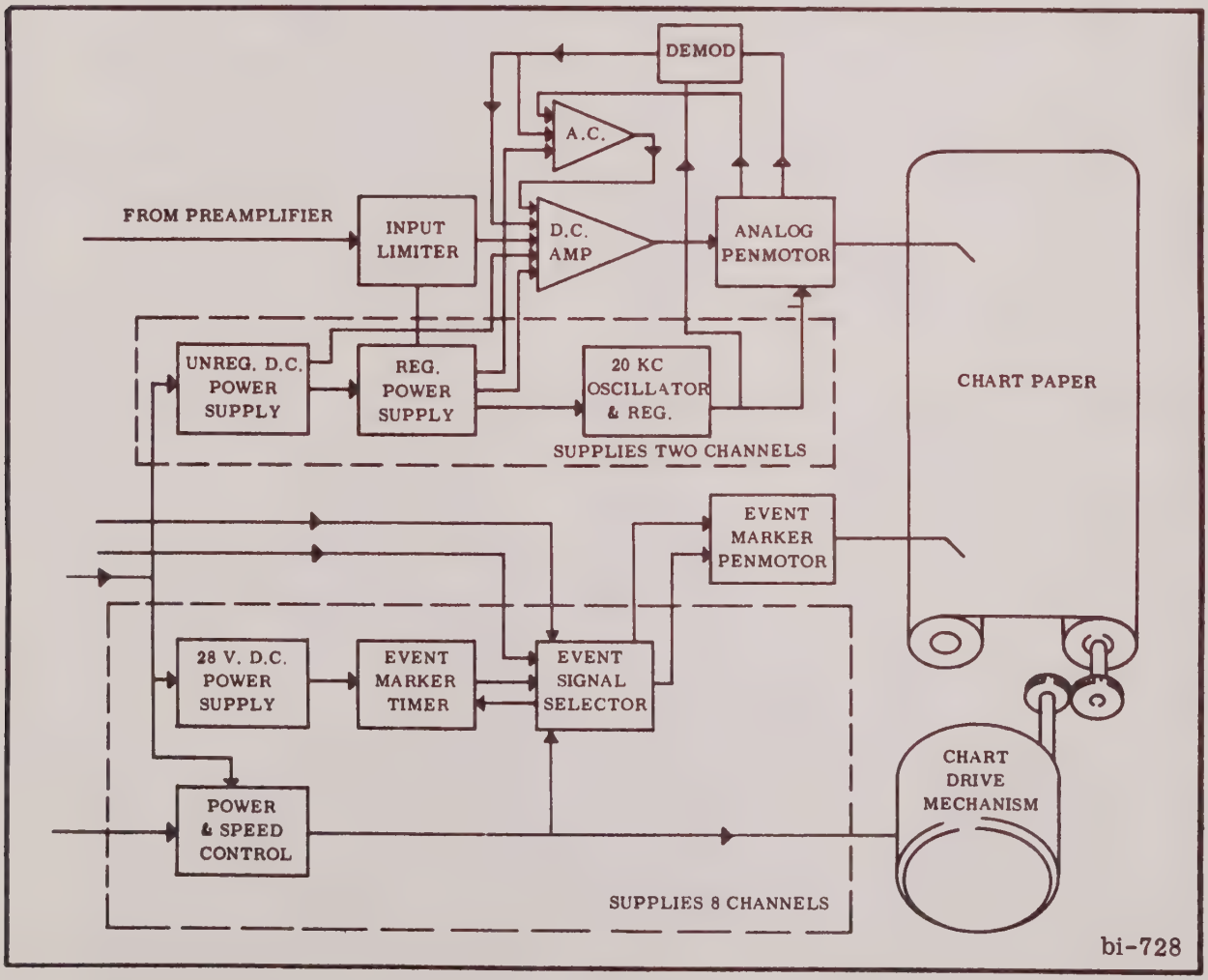

FIGURE 4-1 RECORDER BLOCK DIAGRAM USING DRIVE AMPLIFIERS

4.2 DRIVE AMPLIFIER
15-5221-11 and 15-5221-21

a. General

The drive amplifiers are dual-channel units designed to operate with the two-position feedback penmotor mounted in the oscillograph.

b. Input Limiter (Figure 4-2)

The input signal is applied to the input limiter transistors Q-501 and Q-502 thru protective diodes CR-501 thru CR-506. Maximum output voltage is limited by supply voltages at wipers of potentiometers R-6 and R-7 which are supplied with regulated +5 and -5 volts respectively. I_{co} balance potentiometer allows for no current flow in the input when the input is shorted.

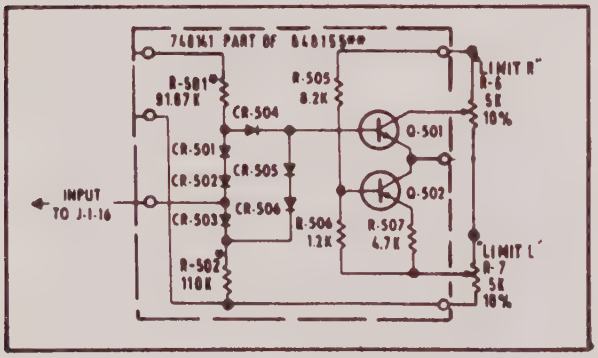

FIGURE 4-2 INPUT LIMITER CIRCUIT

c. Demodulator (Figure 4-3)

The full-wave synchronous transistors Q-103, Q-104, Q-105 and Q-106 demodulate the 20 KC position feedback signal supplied by the Metrisite and deliver a D.C. position feedback signal to the A.C. amplifier and thru the gain control to the error amplifier.

d. Damping Amplifier (Figure 4-3)

The D.C. position feedback signal is passed thru R-106 CRS DAMP (acceleration) control and associated wave shaping networks to transistor Q-101 whose load resistor is the damping (velocity and acceleration) control. Transistor Q-102 supplies the velocity and acceleration currents, controlled by thermistor in penmotor, thru C-103 to the D.C. error amplifier. The input signal, velocity and acceleration, position feedback and D.C. feedback thru R-116 are summed by Q-107 to produce an error signal. This is paraphase coupled to Q-108 providing two polarities of error signal which are amplified by Q-109, Q-113, Q-114 and Q-110, Q-115, Q-120 respectively. Transistors Q-4, Q-5, Q-6 and Q-7 are in a bridge output configuration. These

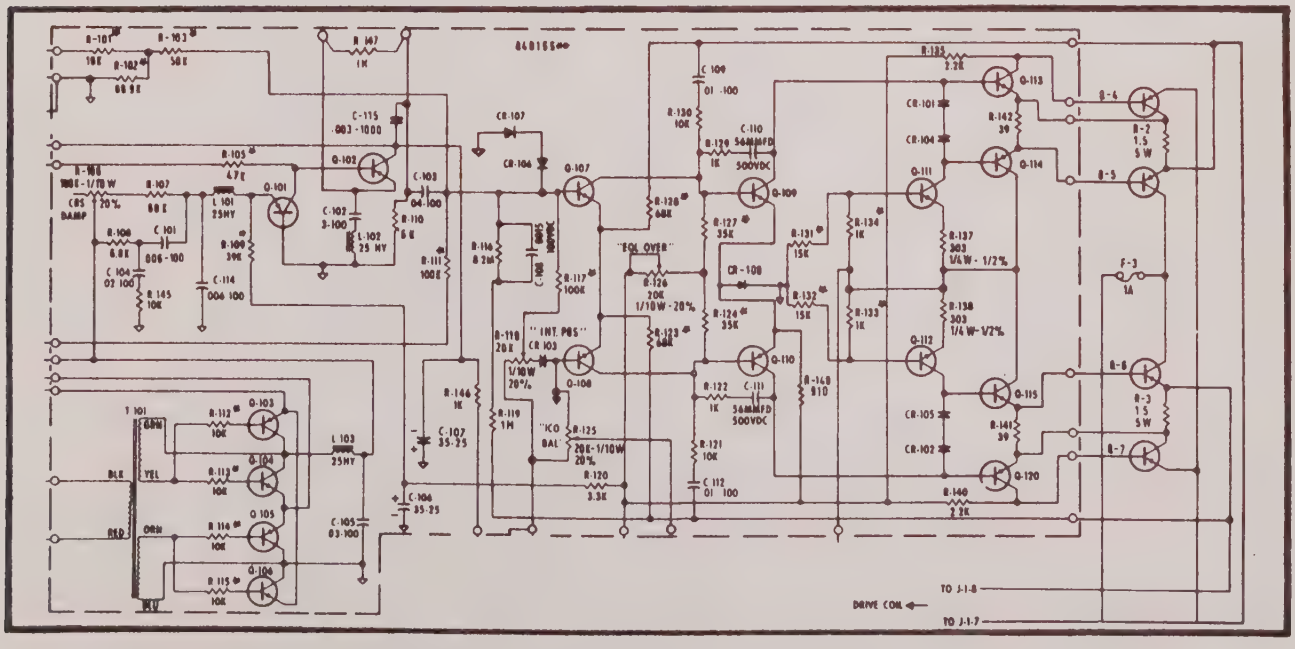

FIGURE 4-3 DEMODULATOR AND A.C. AMPLIFIER CIRCUIT

drive the oscillographic penmotor which connects the electrical output of the D.C. error amplifier to the mechanical motion of the pen.

Transistors Q-111 and Q-112 provide current source to portions of the amplifier and CR-101, CR-102 and CR-104 and CR-105 porvide bias to portions of the amplifier. Fuses F-3 and F-4 prevent excessive current from being drawn in the output circuit. Potentiometer R-118INT POS permits adjustment of pen centering while R-126 EQL OVER control, permits equalization of power gains of the two halves of the D.C. error amplifier. Diodes CR-106 and CR-107 protect transistor Q-107, diode CR-103 provides temperature compensation, and dioe CR-108 provides bias for transistors Q-109 and Q-110.

e. Amplifier Power Supply (supplies two analog recording channels)

1. Unregulated D.C. Power supply (Fig. 4-4)
   A step-down power transformer supplies A.C. power to two full-wave supplies. The filtered outputs of these supplies are approximately 35 volts each. The common point is not connected to the assembly frame or chassis. The -35 volt output is supplied to the final stages of the amplifier and the regulated power supply, while the +35 volt output is connected to the regulator only.

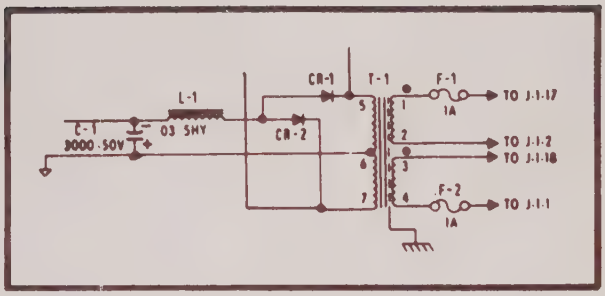

FIGURE 4-4 UNREGULATED POWER SUPPLY

2. Regulator Power Supply (Fig. 4-5). Transistors Q-404, Q-405, Q-1 and associated circuitry comprise a voltage regulator referenced by a zener diode CR-401 and adjusted by R-406 SET 24 to provide regulated 24 volts.

   Zener diode CR-404 provides shunt regulation to -5 volts and zener diode CR-405 provides shunt regulation to +5 volts. Transistors Q-409 and Q-3, isolated by transistor Q-2, comprise an oscillator amplifier circuit whose frequency is adjusted by L-401 SET 20 KC and amplitude controlled by transistor Q-408.

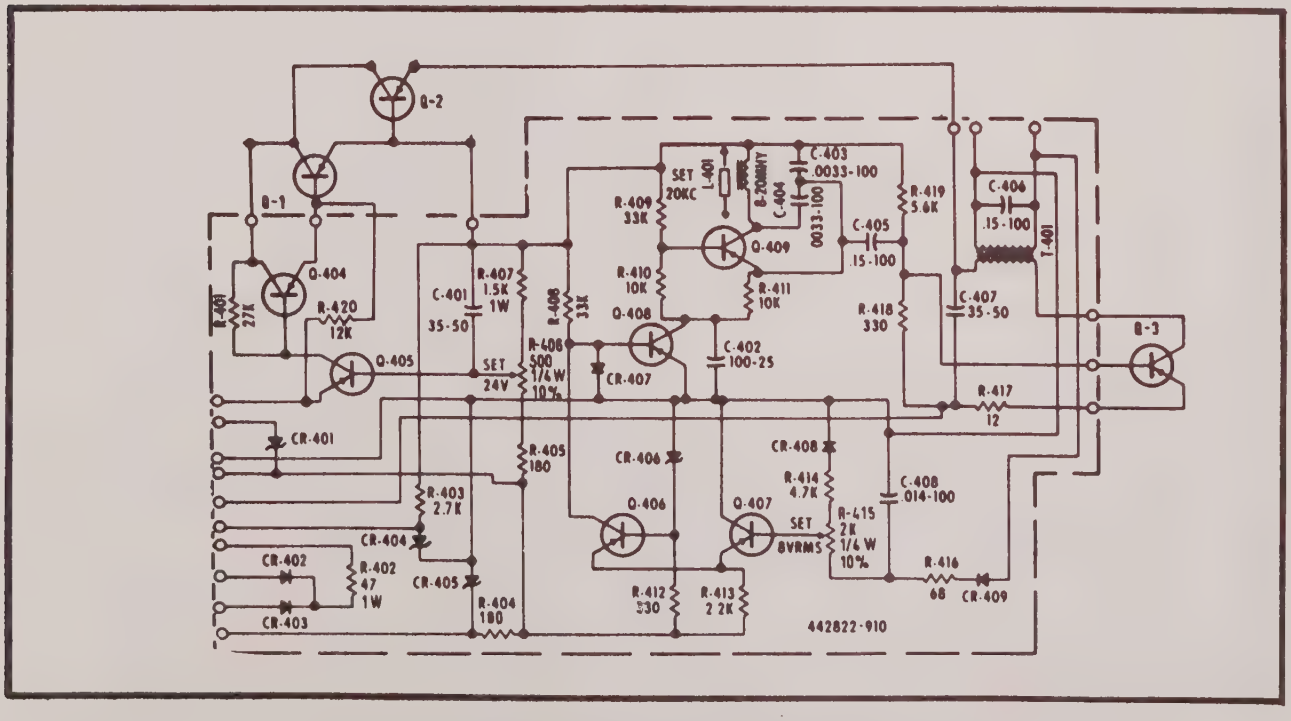

FIGURE 4-5 REGULATED POWER SUPPLY

Transistors Q-406 and Q-407, referenced by zener diode CR-406, control transistor Q-408 which is protected by diode CR-407. Diode CR-409, temperature compensated by diode CR-408, samples the 20KC output while R-415 SET 8 volts rms permits amplitude adjustment.

4.3 MULTIMARKER AMPLIFIER, 13-5281-01

The multimarker amplifier (Fig. 4-6) is capable of driving an 8-channel multimarker penmotor. The amplifier consists of four input relays, one confidence check power supply, two power isolation transformers, and two event amplifier printed circuit assemblies. Each event amplifier printed assembly contains four indentical circuits consisting of D.C. power supply and D.C. amplifier. Each channel contains an individual power supply consisting of an individual power supply consisting of an isolated secondary winding of transformer T-801 or T-802, diodes CR-801 thru CR-804 and an external 500 microfarad capacitor (C-801 to C-808).

The amplifier is a straight-forward saturation amplifier. Input signals are applied to input connector J-801, located on the front of the multimarker amplifier. The amplifier has an input impedance greater than 100 K. This input impedance is derived primarily by R-806 in series with the input base circuit of Q-801. The signal passes thru normally closed contacts of input relay to amplifier input (WB-1, WB-2). The input transistor Q-801 is biased at cutoff thru action of potentiometer R-801 in series bias circuit CR-805, R-805, CR-803 and CR-804. If transistor Q-801 is cutoff, transistors Q-802 and Q-803 are also cutoff. The output is zero current under these conditions. When signal input voltage becomes more positive than bias voltage on wiper of R-801, transistor Q-801 will conduct, causing Q-802 and Q-803 to conduct, raising output voltage to a maximum of 24 volts. Removing the input voltage will cause the amplifier to return to the OFF position.

The confidence check circuit simulates on-off signals to verify operation of the ampliifer. Some recording systems are equipped with confidence check and go-no go buttons on the oscillograph control panel. With confidence check button depressed, a short is applied between pins 7 and 8 of output connector J-804. The short actuates relays (K-801 thru K-804) in the input circuits removing signals from input connector J-801 and applies a 5 volt signal to the input of each channel and all

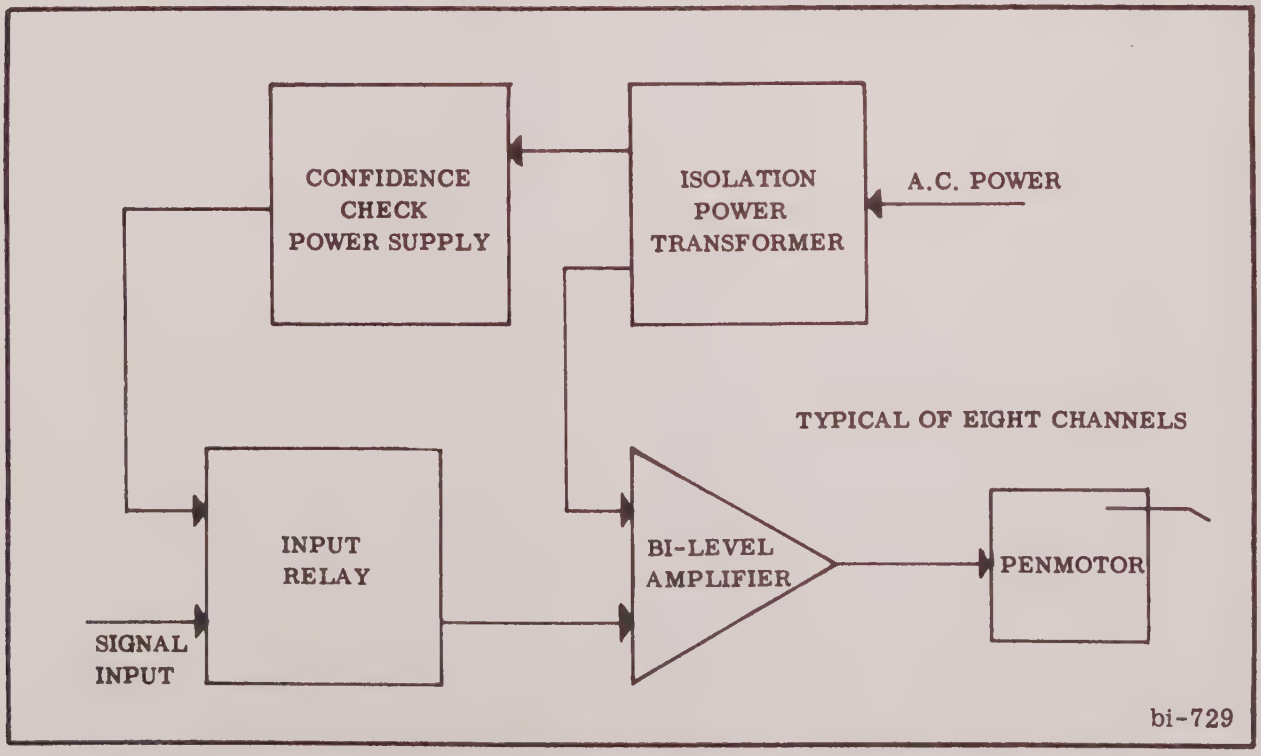

FIGURE 4-6 RECORDER BLOCK DIAGRAM USING MULTIMARKER AMPLIFIERS

pens deflect. With confidence check and go-no go buttons depressed, a short is applied between pins 3 and 4 of output connector J-804, the 5 volt signal is replaced by a 4 volt signal to the input of each ampliifer, and all pens will return to their normal zero position. On systems not equipped with confidence check and go-no go buttons, a physical short across the above mentioned pins will provide the confidence check.

SECTION V

TROUBLESHOOTING

5.1 GENERAL

This section contains procedures, tables and waveform information to aid in the troubleshooting of the Gould 1707 recording system. Due to the variation in the preampliifers employed with this system troubleshooting information for preamplifiers must be obtained from the respective preamplifier manual.

5.2 PROCEDURES

a. General

Troubleshooting tests and methods to correct malfunctions of system components are listed in Tables 5-1 thru 5-5. During normal operation of the system, only two types of signals would be introduced into the drive amplifiers:

1. D.C. voltage (±2.5 volts, typical).

2. A.C. voltage (4 volts at 13 cps peak-to-peak square wave, typical).

It is necessary, therefore, to simulate these conditions when troubleshooting the 40mm and 80mm pen motor drive amplifiers. A third condition which would not normally be considered as an input signal is defined as static or grounded input. In Tables 5-2 thru 5-5 the above three conditions will be represented in the INPUT SIGNAL column.

Troubleshooting of a component should be performed while in the system until the malfunction has been located or isolated to an area.

b. Test Equipment

Equipment required to perform troubleshooting include the following.

1. Volt-ohmmeter (20,000 ohms per volt).

2. Oscilloscope.

c. Substitution

Removing a component suspected to be defective, and installing one known to be operating satisfactorily is perhaps one of the best and most elementary froms of troubleshooting. Cause of malfunction can, in this way, be isolated to a major component which can then be disassembled and further tested. Always return substituted components to their original position.

NOTE: When troubleshooting by substitution do not recalibrate the system with substituted component installed unless it is to remain in position.

d. Drive Amplifier, Model 15-5221-21

When using extender cable, Model 11-1508-03 for troubleshooting, servicing, or calibration of Drive Amplifier, Model 15-5221-21, an incorrect position feedback signal amplitude will result due to the added capacity of the cable tending to resonate the metrisite secondary output. Therefore, when calibrating, it is recommended that the drive amplifier frame assembly, with amplifiers installed, be removed from the system, inverted, and supported on suitable blocks that will permit circulation of air.

5.3 TRANSISTOR TROUBLESHOOTING

a. General

Some advantages of transistors over vacuum tubes are longer life, dependability, lower operating temperatures, size, and shock resistance (but not shock proof). Transistors will withstand more shock than most tubes, but can be damaged by being dropped or being tapped excessively hard.

b. Description

Figure 5-1 illustrates three of the most common types of transistor construction and terminal identification.

Lead identification is often stamped on types B and C, but not on type A. To identify leads for type A, face the bottom of the transistor with middle lead at top. Emitter will be the left and collector on the right. Some types will also have a tab indicating the emitter and the base is then the middle of the three leads. Other, less used, transistors are illustrated in Figure 5-2.

Transistor type D- Collor dot on side indicates collector lead, with base lead between the other two leads.

Transistor type E- Collector lead is one by itself with base between the other two leads.

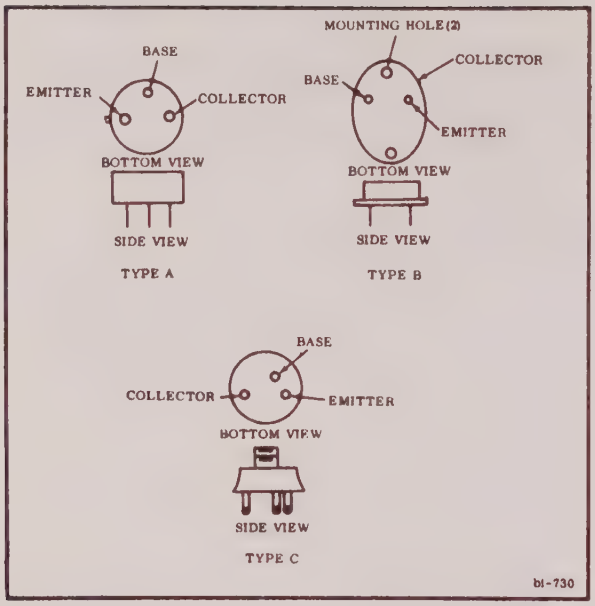

FIGURE 5-1 TRANSISTOR CONSTRUCTION AND TERMINAL IDENTIFICATION

c. Out-of-Circuit Test

CAUTION: TO PREVENT POSSIBLE DAMAGE TO TRANSISTOR, SET OHMMETER AT HIGH SCALE AND REDUCE SETTING TO THE SCALE THAT PRODUCES APPROPRIATE READING.

1. Connect ohmmeter leads to base and collector leads and note meter reading.

2. Reverse connections and note the connection that provides the highest meter reading. This is the reverse-bias direction. Connect leads in reverse-bias direction. Connect leads in reverse-bias direction, note reading, and place a short across emitter and base leads. If resistance reading does not decrease, transistor is defective and must be replaced.

3. Remove ohmmeter lead from base and connect lead to emitter. Observe resistance reading and short base to emitter. If resistance reading does not increase, transistor is defective and must be replaced.

NOTE: The above test will determine whether the transistor is good or bad but will not detect a high leakage or a weak transistor.

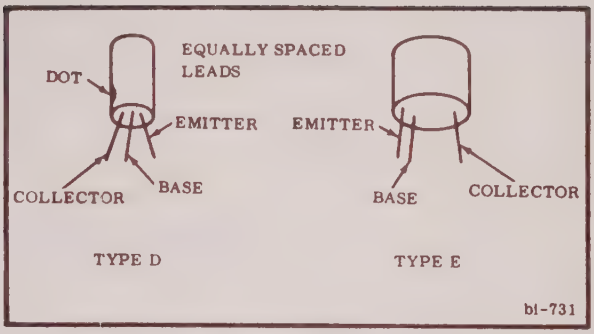

FIGURE 5-2 TRANSISTOR CONSTRUCTION AND TERMINAL IDENTIFICATION

d. In-Circuit Test (Figure 5-3)

Three typical in-circuit tests are performed as follows:

1. Cut off the transistor in the circuitry by placing a short across emitter and base leads. The voltage drop across the resistor in the emitter will be reduced to zero. A transistor that cannot be cut off is defective and must be replaced. Shorting base to emitter causes the voltage to be the same at the base and emitter, therefore no forward bias and the transistor cuts off. The voltage drop across resistor R_1 is caused by the emitter current.

2. Place a resistor (R_3) equal in value to R_2 in parallel with R_2. The emitter current will be doubled and the voltage drop across R_1 will increase. If not, replace transistor.

3. Check an oscillator circuit by placing a short acrossthe tuned section. The oscillations will stop and the collector and emitter current will increase. The transistor becomes an amplifier and can be checked by performing steps 1 or 2.

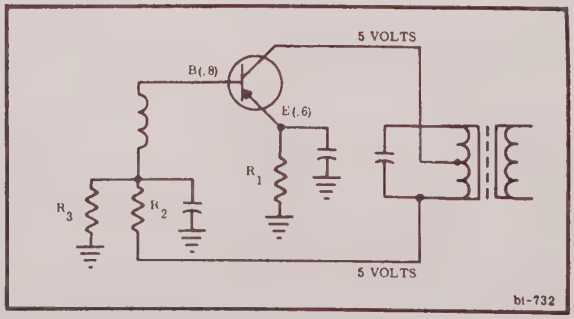

FIGURE 5-3 TRANSISTOR TEST

5.4 TROUBLESHOOTING TABLES

The following troubleshooting tables define common troubles encountered and give the appropriate remedies for the main components of the 1707 system. The test points listed in the tables are referenced to the schematics that follow. All maintenance on this system should be performed in conjunction with or by qualified personnel.

NOTE: All measurements at test points are referenced to "common".

TABLE 5-1 GENERAL SYSTEM TROUBLESHOOTING

MALFUNCTION	CAUSE	REMEDY
1. Recorder inoperative.	a. Power cable not connected.	a. Connect power cable.
	b. Blown fuse.	b. Replace fuse.
	c. Main POWER switch not in ON position.	c. Place switch in ON position.
	d. Interlock switch open indicating one of the following:	
	(1) Paper supply exhausted	(1) Load chart paper
	(2) Writing table not in proper position	(2) Position writing table
	(3) Faulty interlock switch.	(3) Replace interlock switch.
2. No power to pens.	a. Blown fuse.	a. Replace fuse.
NOTE: No power to pens is normal if chart speed STOP button is depressed.	b. Relay contacts on rear of drive amplifier frame open.	b. Clean contacts with air hose or paper.
3. Chart paper drive does not operate.	a. Main POWER switch not in ON position.	a. Place switch in ON position
	b. Chart speed STOP button depressed.	b. Select proper speed.
	c. LOCAL or REMOTE button not depressed.	c. Depress proper button.
	d. Lack of power at source.	d. Connect to correct power source.
	e. Interlock switch open.	e. Check for open paper drawer or exhausted paper supply.
	f. Defect in transmission; motor is running.	f. Replace transmission.

TABLE 5-1 (Continued)

MALFUNCTION	CAUSE	REMEDY
3. Chart paper drive does not operate (Continued)	g. Drive belt broken.	g. Replace drive belt.
	h. Defective drive motor.	h. Replace motor.
	i. Incorrect paper tension.	i. Set paper tension.
4. Chart paper speed is not as indicated by CHART SPEED buttons or does not change properly as CHART SPEED buttons are depressed.	a. Defective transmission.	a. Replace transmission.
	b. Defective contacts on CHART SPEED switch.	b. Replace switch.
	c. Incorrect line voltage or frequency.	c. Check line voltage and frequency.
5. Pen writes intermittently or not at all.	a. Insufficient ink supply.	a. Fill ink master cylinder.
	b. Pen clogged.	b. Clean pen.
	c. Individual ink valve in OFF position.	c. Slide ink valve to ON position.
	d. Manifold tube rotated out of position.	d. Reset manifold tube.
6. Individual pen trace extremely heavy.	a. Improper pen presusre.	a. Adjust pen pressure.
	b. Pen tip not fully in contact with paper.	b. Lap pen.
	c. Noise coming thru drive amplifier or signal source.	c. Switch amplifier or channel on penmotor plugs to isolate source.
7. Pen tip gouges or tears paper.	Improper pen pressure.	Adjust pen pressure.
8. Pen will not travel on timing line.	Improper pen alignment.	Align pen.
9. Both pens do not move.	a. Apply a signal to the drive amplifiers. If neither pen moves, failure is in D.C. power supply, or drive amplifier relays.	a. Refer to drive amplfier schematic wiring diagram.
	b. If signal is applied to drive amplifiers and pens move uncontrollably to one side of chart, failure is in 20 KC Power Supply.	b. Refer to drive amplifier schematic wiring diagram.

TABLE 5-1 (Continued)

MALFUNCTION	CAUSE	REMEDY
9. Both pens do not move. (Continued)	c. If signal applied to drive amplifiers causes pens to move normally, failure is in preamplifier circuits or inputs.	c. Refer to preamplifier schematic wiring diagram.
10. One pen does not move or moves uncontrollably.	a. Penmotor failure.	a. Plug penmotor harness from operating channel into failed penmotor. If pen does not move, penmotor defective and must be replaced.
	b. Apply a signal to the drive amplifiers. If pen moves normally, failure is in the preamplifier. If pen does not move, failure is in drive amplifier.	b. Refer to drive amplifier schematic wiring diagrams.
11. Amplifier inoperative.	a. Blown fuse on power supplies.	a. Replace fuse or fuses as necessary.
	b. Amplifier not positioned properly.	b. Press fully into position.
12. Any two connected channels stop operating.	a. One dual drive amplifier assembly inoperative.	a. Replace drive amplifier.
	b. Defective cabling.	b. Replace defective cabling.
	c. Loose connections.	c. Check all connections.
13. Any one channel stops operating.	Fuses blown on side of drive amplifier associated with dead channel.	Replace fuse or fuses as necessary.

TABLE 5-2 OSCILLOGRAPH TROUBLESHOOTING

MALFUNCTION	AFFECTED CIRCUIT	CAUSE	REMEDY
1. No power to pens		Amp not installed properly or making poor connection.	Check for proper installation.
2. Chart paper speed not as indicated	28 volts D.C. power supply	a. CR-701, CR-702, C-702 defective.	a. Replace.
		b. F-702 defective.	b. Replace.
3. Pen writes intermittently		Ink pump motor defective.	Replace.
4. Individual pen trace extremely heavy, light, and/or gouges paper in one portion of chart excursion only		a. Improperly mounted penmotor.	a. Refer to Para. 5.4.8 thru 5.4.14.
		b. Penmotor drive arm bent.	b. Replace penmotor. (Para 5.4.8 thru 5.4.14)
		NOTE: Check pen pressure at each side of channel. If pressure difference is greater than 5 grams, drive arm is bent.	
5. Horizontal Oscillograph will not slide properly		Improperly adjusted slide locking mechanism.	Refer to operator's manual.
6. Pen will not deflect when input signal is applied		a. Defective drive amplifier.	a. Refer to drive amplifier troubleshooting.
		b. Penmotor coil open (internal).	b. Replace penmotor.
7. Pen will not return to any given position (hysteresis) and appears "sluggish"		a. Loose pen.	a. Refer to Para. 5.4.5.
		b. Broken or loose penmotor hand assembly.	b. Refer to Para. 5.4.7.
8. Penmotor movement irratic and/or abrupt or jerky		a. Penmotor internal bearings seized (frozen).	a. Replace penmotor (Para. 5.4.8 thru 5.4.14).
		b. Penmotor drive shaft bent or damaged.	b. Replace penmotor (Para. 5.4.8 thru 5.4.14).

TABLE 5-3 DRIVE AMPLIFIER, MODELS 15-5221-11 and 15-5221-21

MALFUNCTION	AFFECTED CIRCUIT	TEST POINT	NORMAL CIRCUIT CONDITION	INPUT SIGNAL	FAULTY CIRCUIT REACTION	CAUSE	REMEDY
1. Pen will not cover full scale on chart with application of signal	Input limiters	B	±2.2 volts	D.C.	+2.2 volts, or -2.2 volts but not both	Q-502, Q-501, R-6 or R-7, defective usually intermittently at mid range	Replace
			±5 volts	A.C.	Cannot be set (by R-6, R-7) to any value from ±0.2 volts to ±4.0 volts		
2. Pen not stiff in either direction	a. Unregulated power supply	C	0.5 volts -35 volts ±20% -27 to -35 volts	Static D.C. A.C.	Zero, or +2.5 or -2.5 less than -35 volts ±20% less than -27 volts	Open protective diodes CR-501 thru CR-506. No A.C. power in system	Locate and Replace open diode. Check power line voltage from F-1 to F-2. If either is defective, replace both with new fuses and remove F-3, F-4, F-5, and F-6 and check point C. **NOTE: When replacing fuses, check to be sure replacement fuse is good. If voltage still not normal, check Q-1, Q-2, and Q-3 and replace if defective. Check CR-1 and CR-2, replace if defective.**
	b. Regulated D.C. Power Supply (Negative) **NOTE: Adjust arm of R-406 to approx. -0.3 volts.**	D	-27 volts	A.C. or D.C.	1) If zero volts	R-406, Q-404 and/or Q-405 defective	Replace
					2) Voltage same as at C	Q-404, Q-405, Q-1 and/or Q-2 defective	Replace
	c. Regulated D.C. Power Supply (Positive)	F	+7.5 volts ±20%	A.C. or D.C.	Zero volts	C-401, C-402, C-403, and/or R-402 defective	Replace

TABLE 5-3 (Continued)

MALFUNCTION	AFFECTED CIRCUIT	TEST POINT	NORMAL CIRCUIT CONDITION	INPUT SIGNAL	FAULTY CIRCUIT REACTION	CAUSE	REMEDY
2. Pen not stiff in either direction-continued	d. Regulated A.C. 20KC Power Supply	G	7.5 volts rms(80mm) 7.0 volts rms(40mm) **NOTE: Adjusted by R-415.**	A.C. or D.C.	Zero volts	Q-3, Q-408, Q-407, Q-406, and/or Q-409 defective	Replace
		NOTE:	**After malfunction has been corrected, it is necessary to adjust L-401 for proper circuit performance by placing a jumper wire across C-402 and adjusting L-401 for maximum A.C. voltage at point G (penmotors must be connected). Remove jumper wire and readjust R-415 for correct value.**				
3. Pen stiff in one direction only	Demodulator	H	Approx. ±3 volts (80mm and 40mm) **NOTE: To have a reading of ±3 volts, manually deflect pen to the left or right, with F-3,F-4,F-5, F-6, removed.**	A.C. or D.C.	Approx +3 volts or -3 volts, but not both	Q-103, Q-104, Q-105, and/or Q-106 defective	Replace
4. Pen is deflected full scale in either direction and will not return.	a. D.C. Error Amplifier			A.C. or D.C.	a. Pen is not affected input signals	a. D.C. error amplifier	a. Refer to step 5
	b. Regulated A.C. 20KC Power Supply and Demodulator			A.C. or D.C.	b. Pen is affected by input signals	b. Loss of position feedback signal	b. Refer to step 2d and step 3
5. Pen is operative with D.C. signal, but not with A.C. signal or pen appears normal when not disturbed but when disturbed will oscillate uncontrollably at approx. 45 cps.	a. A.C. Amplifier	N	a. Waveform (shape only) should be identical to waveform at point H.	A.C.	a. Desired waveform present	a. L-101 open, Q-101 and Q-102 defective	
	b. D.C. Error Amplifier	J and K	b. Approx. 12.5 volts	Static or D.C.	b. Voltage same	b. Q-4, Q-5, Q-6, Q-7, Q-113, Q-114, Q-115, and/or Q-120 defective	b. Replace
		NOTE:	**Produce an error in amplifier by manually deflecting pen to left and right. Voltage at point J will be approximately zero when voltage at point K is approximately 25 volts and vice-versa when direction of manual error is charged. If not, check points L and M in the same manner as points J and K.**				

TABLE 5-3 (Continued)

MALFUNCTION	AFFECTED CIRCUIT	TEST POINT	NORMAL CIRCUIT CONDITION	INPUT SIGNAL	FAULTY CIRCUIT REACTION	CAUSE	REMEDY
5. Continued		L and M	Same as step b		Voltage other than specified	Q-109, Q-107, Q-110, Q-108, R-126, CR-101, CR-102, CR-104 and/or CR-105 defective	Replace
	CAUTION:	**Do not ground points J, K, L, and M, to prevent further possible damage to the circuit**					
6. Pen operates normally but has approx. 800 cps audible vibration when standing still						L-102 open	Replace
7. Equal overshoot pot (EQL OVER R-126) will not adjust for equal overshoot on square wave or during damping calibration (Para. 3.1.6b steps 1 and 2) signal shows D.C. displacement	EQL OVER (equal overshoot) control		Equal overshoot is obtained	A.C.		R-126, Q-109 and/or Q-110 defective	Replace
8. Course damping (CRS DAMP) not will not make range.	CRS DAMP (R-106) (course damping) control	H		A.C.		R-106 and/or Q-102 defective	Replace
9. DAMPING pot will not make range	DAMPING (R-10) control			A.C.		R-10, Q-102, C-101, C-114, and/or C-103 defective	Replace
10. I_{co} will not eliminate pen movement as required during Calibration (Para. 3.1.6)	I_{co} BAL (balance) control			Static		R-125, Q-107, Q-108 and/or Q-501 defective	Replace **NOTE: Replace Q-501 with Brush part number 242323-1 only**

TABLE 5-3 (Continued)

MALFUNCTION	AFFECTED CIRCUIT	TEST POINT	NORMAL CIRCUIT CONDITION	INPUT SIGNAL	FAULTY CIRCUIT REACTION	CAUSE	REMEDY
11. SPAN control will not make range	SPAN control (R-11)					R-11, Q-501, Q-502, Q-103, Q-104, Q-105, and/or Q-106 defective	Replace
12. INT POS (internal position) control will not make range when preamplifier is disconnected.	INT POS control (R-118)		**NOTE: Slider arm of control R-118 is normally located within 20% of diode (CR-103) end of control for pen to be at center of chart**			CR-103 and/or R-118 defective	Replace

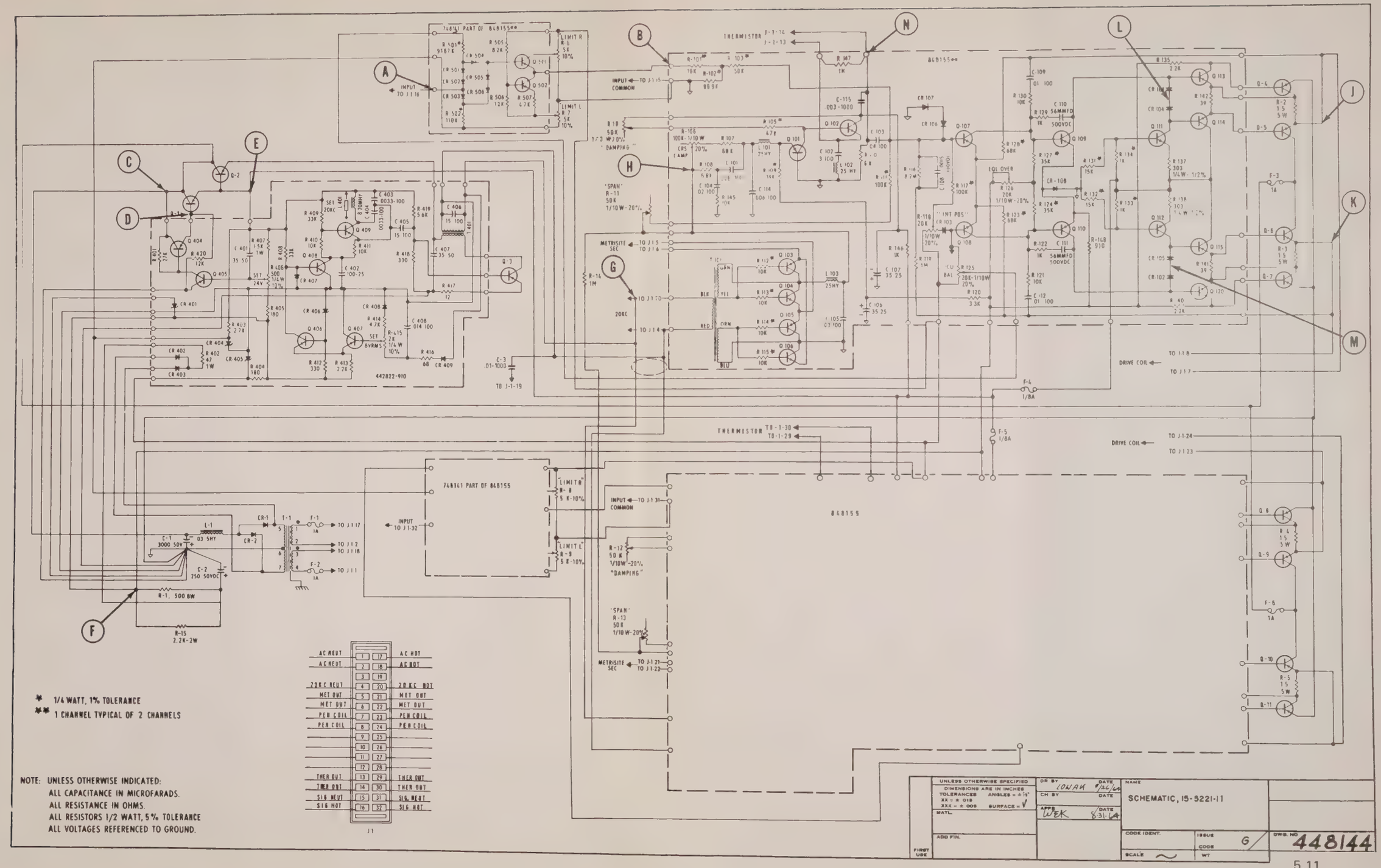

748141 PART OF 848155**
848155**
848155
442822-910
THERMISTOR
INPUT COMMON
METRISITE SEC
DRIVE COIL
"DAMPING"
"SPAN"
"INT POS"
EQL OVER
LIMIT R
LIMIT L
AC NEUT
AC HOT
20KC NEUT
20KC HOT
MET OUT
PEN COIL
THER OUT
SIG NEUT
SIG HOT
J1
* 1/4 WATT, 1% TOLERANCE
** 1 CHANNEL TYPICAL OF 2 CHANNELS
NOTE: UNLESS OTHERWISE INDICATED:
ALL CAPACITANCE IN MICROFARADS.
ALL RESISTANCE IN OHMS.
ALL RESISTORS 1/2 WATT, 5% TOLERANCE
ALL VOLTAGES REFERENCED TO GROUND.
UNLESS OTHERWISE SPECIFIED
DIMENSIONS ARE IN INCHES
TOLERANCES
XX = ± .015
XXX = ± .005
ANGLES = ± 1/2°
SURFACE = √
MATL.
ADD FIN.
FIRST USE
DR BY LOWAK DATE 8/26/64
CH BY DATE
APPR WEK DATE 8-31-64
NAME
SCHEMATIC, 15-5221-11
CODE IDENT.
ISSUE
CODE G
SCALE ~
WT
DWG. NO 448144

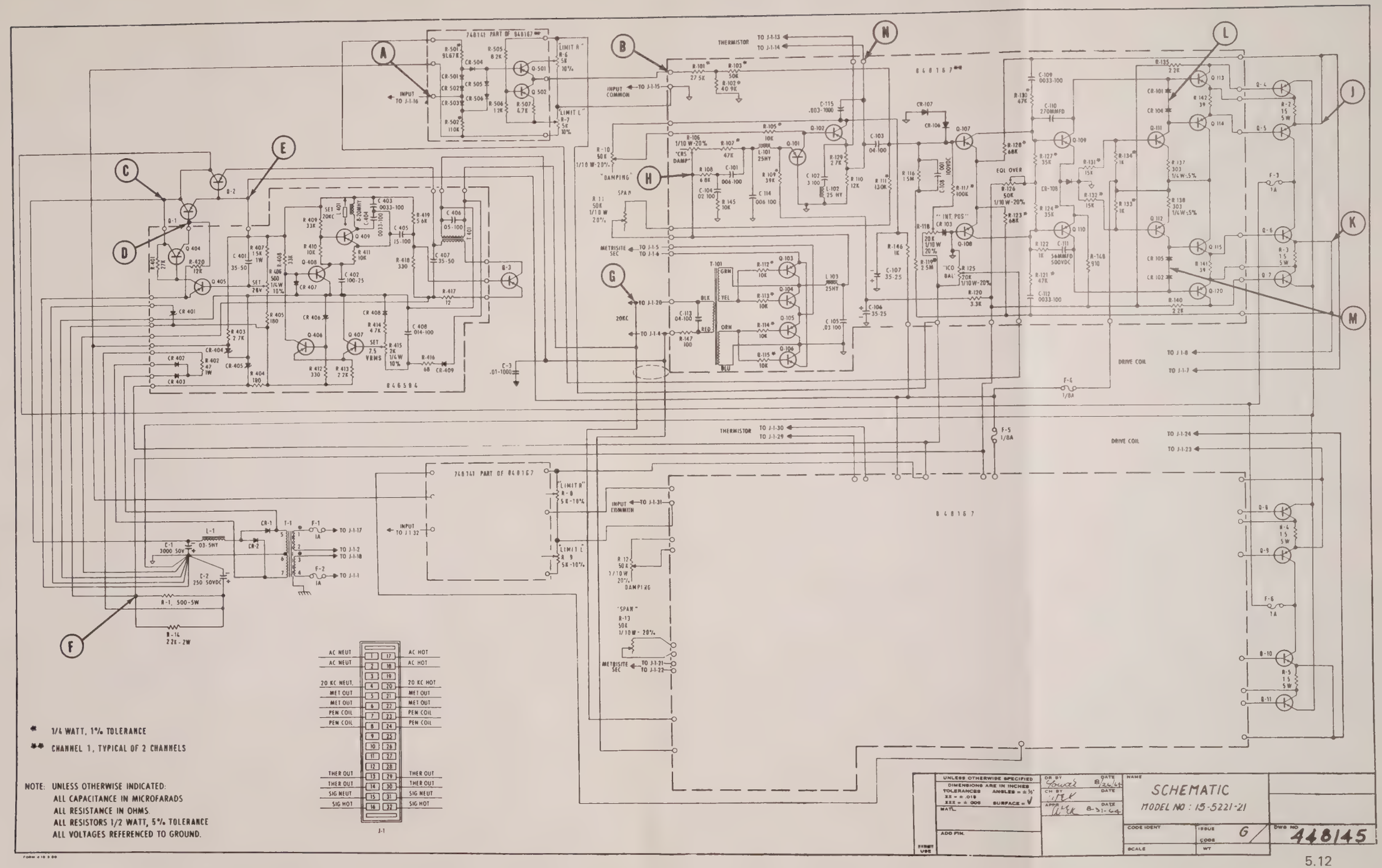
748141 PART OF 848167
INPUT TO J-1-16
LIMIT R
LIMIT L
INPUT COMMON
TO J-1-15
THERMISTOR
TO J-1-13
TO J-1-14
"CRS DAMP"
"DAMPING"
SPAN
METRISITE SEC
TO J-1-5
TO J-1-6
TO J-1-20
20KC
TO J-1-4
"INT POS"
EQL OVER
"ICO BAL"
DRIVE COIL
TO J-1-8
TO J-1-7
F-4 1/8A
F-5 1/8A
TO J-1-24
TO J-1-23
848167
846584
748141 PART OF 848167
"LIMIT B"
"LIMIT L"
INPUT TO J-1-32
INPUT EDSMITH
TO J-1-31
"SPAN"
METRISITE SEC
TO J-1-21
TO J-1-22
L-1
C-1 3000 50V
C-2 250 50VDC
CR-1
CR-2
T-1
F-1 1A
F-2 1A
TO J-1-17
TO J-1-2
TO J-1-18
TO J-1-1
R-1, 500-5W
R-14 22K-2W
A
B
C
D
E
F
H
J
K
L
M
N
AC NEUT
AC HOT
20 KC NEUT.
20 KC HOT
MET OUT
PEN COIL
THER OUT
SIG NEUT
SIG HOT
J-1
* 1/4 WATT, 1% TOLERANCE
** CHANNEL 1, TYPICAL OF 2 CHANNELS
NOTE: UNLESS OTHERWISE INDICATED:
ALL CAPACITANCE IN MICROFARADS
ALL RESISTANCE IN OHMS.
ALL RESISTORS 1/2 WATT, 5% TOLERANCE
ALL VOLTAGES REFERENCED TO GROUND.
UNLESS OTHERWISE SPECIFIED
DIMENSIONS ARE IN INCHES
TOLERANCES
ANGLES = ± ½°
SURFACE = √
MATL
ADD PTM.
DR BY
DATE 8/24/64
CH BY
DATE
APP'D
DATE 8-31-64
NAME
SCHEMATIC
MODEL NO: 15-5221-21
CODE IDENT
ISSUE G
SCALE
WT
DWG NO 448145

TABLE 5-4 MULTIMARKER AMPLIFIER MODEL 13-5281-00

MALFUNCTION	AFFECTED CIRCUIT	TEST POINT	NORMAL CIRCUIT CONDITION	INPUT SIGNAL	FAULTY CIRCUIT REACTION	CAUSE	REMEDY
1. Pens will not deflect with signal applied (all pens)	Multimarker drive amplifier					a. Fuse F-801 defective	a. Replace
						b. Connectors not fully engaged	b. Verify good mechanical connection
		P-804 pins 1 and 17	Line voltage			c. No input power	c. Verify input power
2. Four pens deflect, four pens do not deflect	Drive amplifier					Open primary winding of T-801, or T-802	Replace
3. All pens do not deflect with signal	a. Drive amplifier power transformer		a. Refer to schematic 446263 for pin connection. Appropriate channels, 33 volts rms at A.C. in.		No voltage at indicated points	a. Open secondary winding of T-801 or T-802 for affected channels	a. Replace
						b. Relay K-801 thru K-804 defective or dirty contacts	b. Replace or repair
	c. Drive amplifier circuit board.		c. Refer to theory of operation for correct parameters.			c. Drive amplifier circuit board defective	c. Replace defective component
						d. Defective penmotor	d. Replace
4. Pens do not deflect when confidence check button is depressed	Drive amplifier confidence check circuit.					a. Defective switch	a. Replace
						b. Broken wires	b. Replace
		c. WB-3 points 1 and 4				c. Defective power supply WB-3	c. Replace defective component
		d. WB-3 points 2 and 5	d. 5 volts ±0.1 volt			d. Defective power supply WB-3	d. Replace defective component

TABLE 5-4 (Continued)

MALFUNCTION	AFFECTED CIRCUIT	TEST POINT	NORMAL CIRCUIT CONDITION	INPUT SIGNAL	FAULTY CIRCUIT REACTION	CAUSE	REMEDY
5. Pen will not return to zero when no-go button depressed	Drive amplifier					Control R-509 improperly adjusted	Adjust

TABLE 5-5 INTERCHANNEL EVENT MARKER MODEL 11-2221-00/01

MALFUNCTION	AFFECTED CIRCUIT	TEST POINT	NORMAL CIRCUIT CONDITION	INPUT SIGNAL	FAULTY CIRCUIT REACTION	CAUSE	REMEDY
1. Event markers do not deflect, internal and external						a. Function switch (S-707, S-708) defective	a. Repair or replace
						b. Event marker defective	b. Replace
						c. Event marker amplifier	c. Replace defective component
						d. 28 volt power supply	d. Replace defective component
2. Event markers do not deflect (internal operation only)						a. Internal switch defective	a. Repair or replace
						b. Internal timer circuit defective	b. Replace defective component
3. Event markers do not deflect (external operation only)						a. External source inoperative	a. Repair
						b. Function switch (S-707, S-708) defective	b. Repair
4. Event markers (not all) do not deflect properly						a. Event marker defective	a. Replace
						b. Broken wires	b. Replace
5. Pens deflect but do not ink properly						Refer to ink supply section	Repair

5.5 TEST WAVEFORMS

The following waveforms illustrate normal performance of the two drive amplifiers, models 15-5221-11 & -21. They are a further aid in the troubleshooting of these amplifiers. Test point locations are shown on the printed circuit board layouts and schematics that follow.

WAVEFORM	TEST POINT	SCOPE SETTING				DC VOLTAGE
		SWEEP SPEED	VERT. SENS. V/CM	TRIGGER MODE	TRIGGER POLARITY SOURCE	
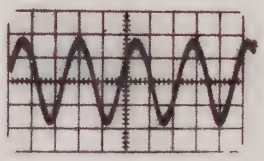	1	20 U SEC/CM	0.02	AUTO	+	-25
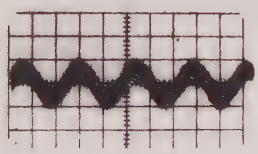	2	20 U SEC/CM	0.02	AUTO	+	-25.5
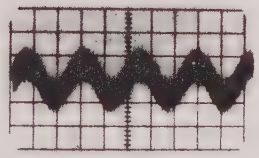	3	20 U SEC/CM	0.02	AUTO	+	-25.7
NONE	4	---	---	---	---	-49.5
NONE	5	---	---	---	---	0
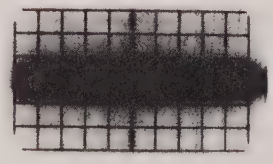	6	5 U SEC/CM	0.01	AUTO	+	-0.07

WAVEFORM CHART, 20 KHz OSCILLATOR (442822-910) SCHEMATIC NO. 448144 (Sheet 1 of 3)

WAVEFORM	TEST POINT	SCOPE SETTING				DC VOLTAGE
		SWEEP SPEED	VERT. SENS. V/CM	TRIGGER MODE	TRIGGER POLARITY SOURCE	
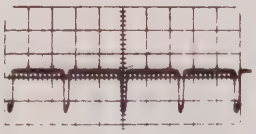	7	20 U SEC/CM	0.5	AUTO	-	+0.5
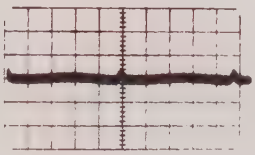	8	10 U SEC/CM	0.02	AUTO	+	-6.8
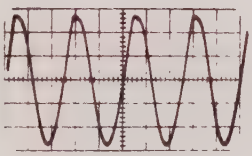	9	20 U SEC/CM	5.0	AUTO	+	-27.0
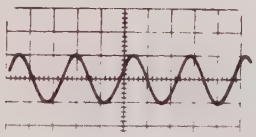	10	20 U SEC/CM	1.0	AUTO	+	-12.0
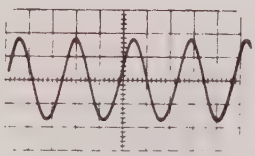	11	20 U SEC/CM	0.5	AUTO	+	-1.2
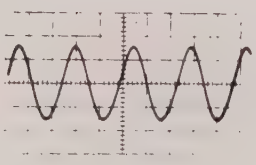	12	20 U SEC/CM	0.5	AUTO	+	-1.1

WAVEFORM CHART, 20 KHz OSCILLATOR (442822-910) SCHEMATIC NO. 448144 (Sheet 2 of 3)

WAVEFORM	TEST POINT	SCOPE SETTING				DC VOLTAGE
		SWEEP SPEED	VERT. SENS. V/CM	TRIGGER MODE	TRIGGER POLARITY SOURCE	
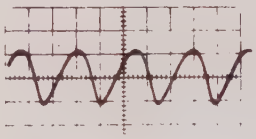	13	20 U SEC/CM	10.0	AUTO	+	-24
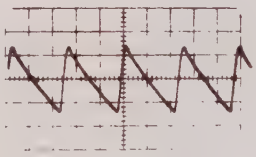	14	20 U SEC/CM	1.0	AUTO	+	+7.1
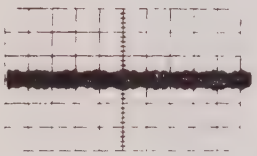	15	20 U SEC/CM	0.01	AUTO	+	+4.9
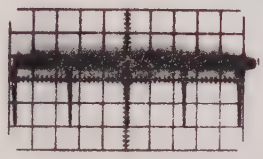	16	20 U SEC/CM	0.02	AUTO	-	-5.0
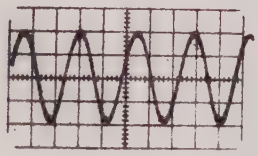	17	20 U SEC/CM	5.0	AUTO	+	---

NOTE: Voltages taken with 5 MM output on chart, 50 CPS.

WAVEFORM CHART, 20 KHz OSCILLATOR (442822-910) SCHEMATIC NO. 448144 (Sheet 3 of 3)

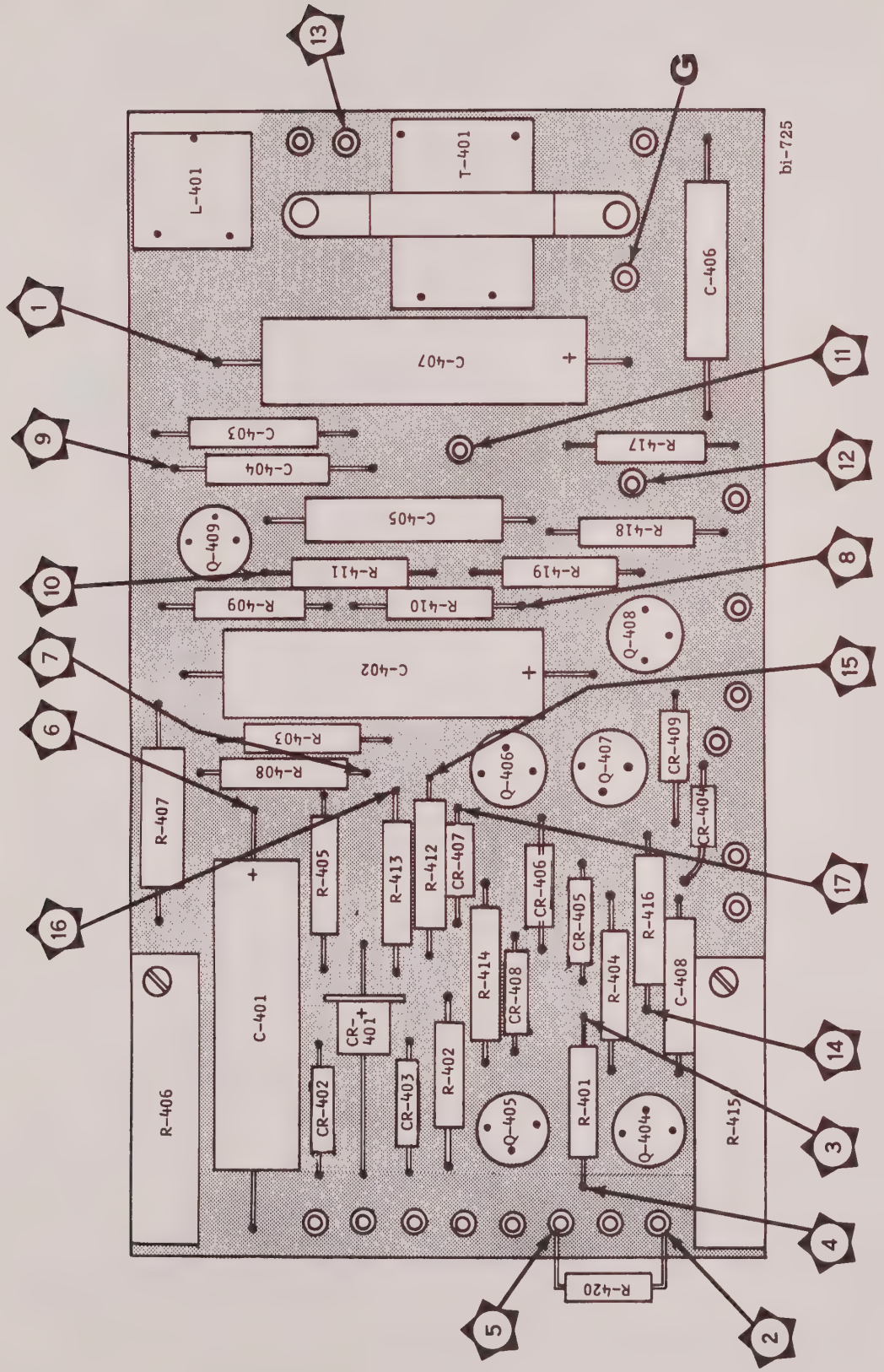

FIGURE 5-4 20 KHz OSCILLATOR 442822-910

WAVEFORM	TEST POINT	SCOPE SETTING				INPUT SIGNAL
		SWEEP SPEED	VERT. SENS. V/CM	TRIGGER MODE	TRIGGER POLARITY SOURCE	
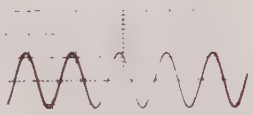	1	10 M SEC/CM	1.0	AUTO	+	50 CPS 20 MM DEFLECTION (25 LINES)
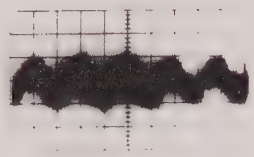	2	10 M SEC/CM	0.01	AUTO	+	50 CPS 20 MM DEFLECTION (25 LINES)
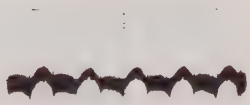	3	10 M SEC/CM	0.01	AUTO	+	50 CPS 20 MM DEFLECTION (25 LINES)
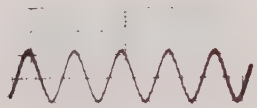	4	10 M SEC/CM	5.0	AUTO	+	50 CPS 20 MM DEFLECTION (25 LINES)
	5	10 M SEC/CM	5.0	AUTO	+	50 CPS 20 MM DEFLECTION (25 LINES)
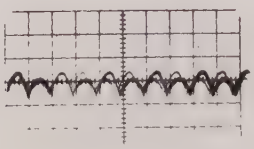	6	10 M SEC/CM	0.1	AUTO	+	50 CPS 20 MM DEFLECTION (25 LINES)

WAVEFORM CHART, AMPLIFIER ASSEMBLY (848155) SCHEMATIC NO. 448144 (Sheet 1 of 4)

WAVEFORM	TEST POINT	SCOPE SETTING				INPUT SIGNAL
		SWEEP SPEED	VERT. SENS. V/CM	TRIGGER MODE	TRIGGER POLARITY SOURCE	
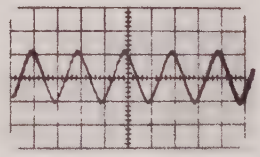	7	10 M SEC/CM	5.0	AUTO	+	50 CPS 20 MM DEFLECTION (25 LINES)
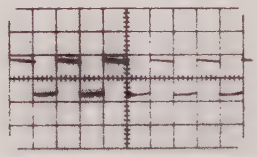	8	10 M SEC/CM	5.0	AUTO	+	50 CPS 20 MM DEFLECTION (25 LINES)
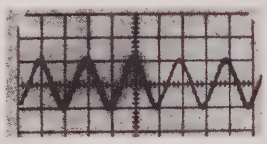	9	10 M SEC/CM	10.0	AUTO	+	50 CPS 20 MM DEFLECTION (25 LINES)
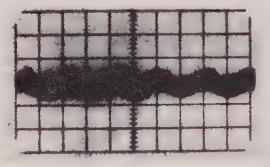	10	10 M SEC/CM	0.01	AUTO	+	50 CPS 20 MM DEFLECTION (25 LINES)
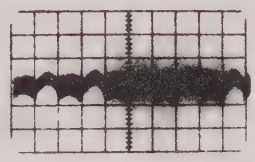	11	10 M SEC/CM	0.01	AUTO	+	50 CPS 20 MM DEFLECTION (25 LINES)
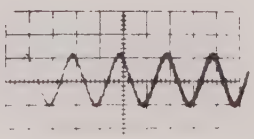	12	10 M SEC/CM	5.0	AUTO	+	50 CPS 20 MM DEFLECTION (25 LINES)

WAVEFORM CHART, AMPLIFIER ASSEMBLY (848155) SCHEMATIC NO. 448144 (Sheet 2of4)

WAVEFORM	TEST POINT	SCOPE SETTING				INPUT SIGNAL
		SWEEP SPEED	VERT. SENS. V/CM	TRIGGER MODE	TRIGGER POLARITY SOURCE	
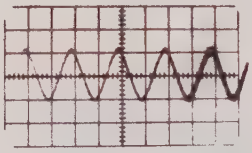	13	10 M SEC/CM	5.0	AUTO	+	50 CPS 20 MM DEFLECTION (25 LINES)
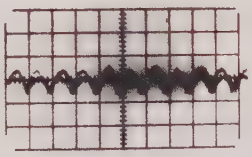	14	10 M SEC/CM	0.1	AUTO	+	50 CPS 20 MM DEFLECTION (25 LINES)
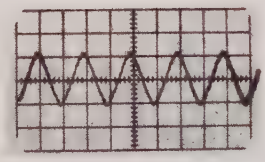	15	10 M SEC/CM	5.0	AUTO	+	50 CPS 20 MM DEFLECTION (25 LINES)
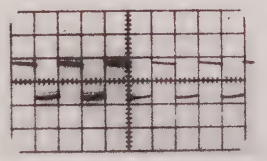	16	10 M SEC/CM	5.0	AUTO	+	50 CPS 20 MM DEFLECTION (25 LINES)
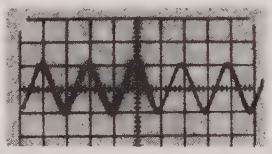	17	10 M SEC/CM	5.0	AUTO	+	50 CPS 20 MM DEFLECTION (25 LINES)
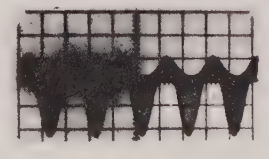	18	10 M SEC/CM	2.0	AUTO	+	50 CPS 20 MM DEFLECTION (25 LINES)

WAVEFORM CHART, AMPLIFIER ASSEMBLY (848155) SCHEMATIC NO. 448144 (Sheet 3 of 4)

WAVEFORM	TEST POINT	SCOPE SETTING				INPUT SIGNAL
		SWEEP SPEED	VERT. SENS. V/CM	TRIGGER MODE	TRIGGER POLARITY SOURCE	
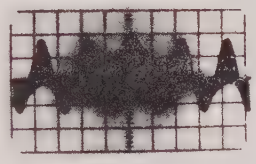	19	10 M SEC/CM	2.0	AUTO	+	50 CPS 20 MM DEFLECTION (25 LINES)
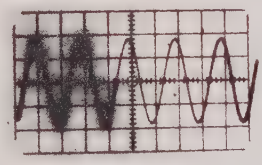	20	10 U SEC/CM	1.0	AUTO	+	50 CPS 20 MM DEFLECTION (25 LINES)
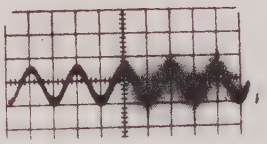	21	10 M SEC/CM	0.02	AUTO	+	50 CPS 20 MM DEFLECTION (25 LINES)
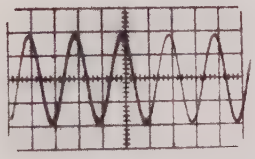	22	10 M SEC/CM	0.5	AUTO	+	50 CPS 20MM DEFLECTION (25 LINES)

WAVEFORM CHART, AMPLIFIER ASSEMBLY (848155) SCHEMATIC NO. 448144 (Sheet 4 of 4)

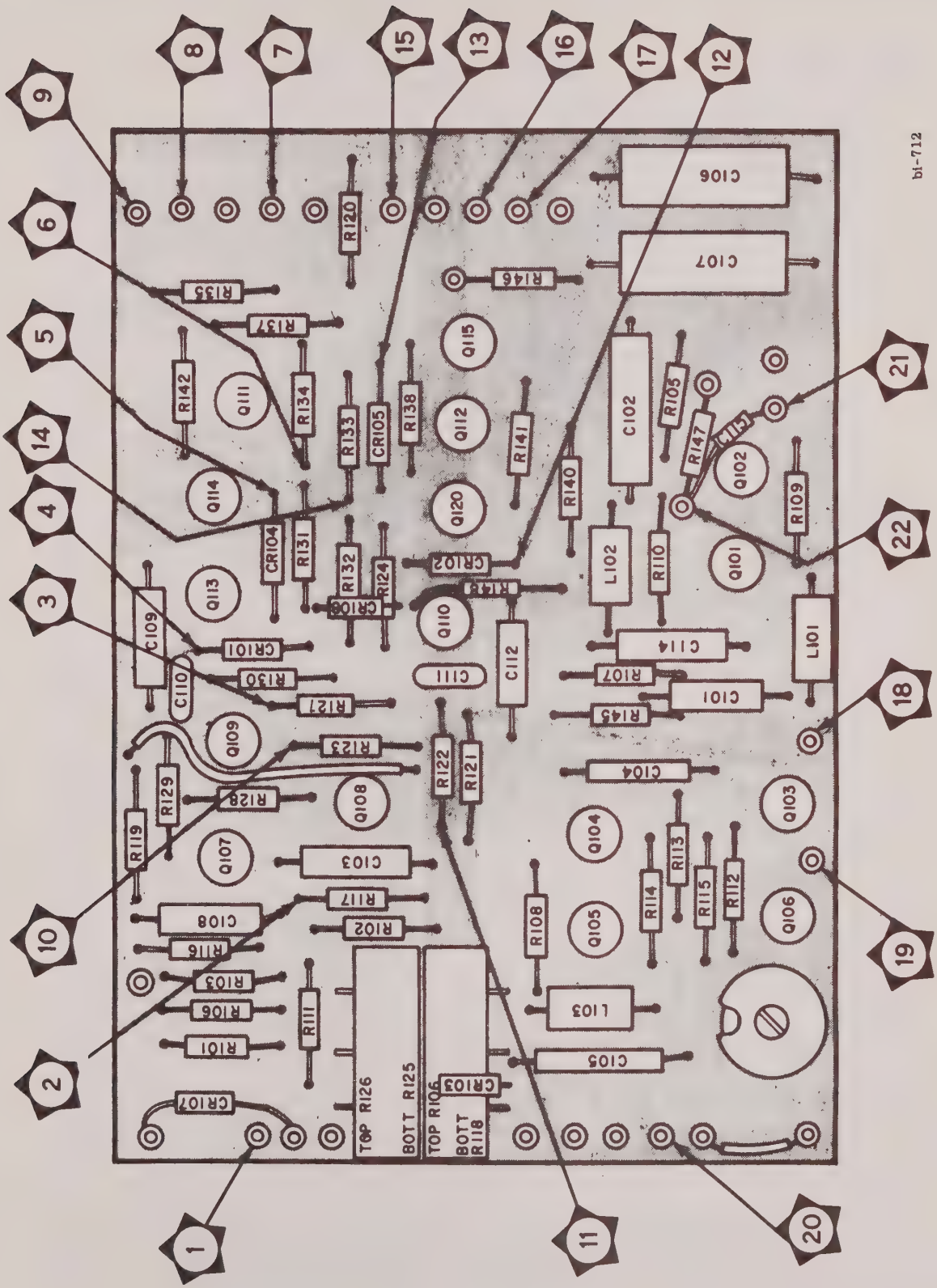

FIGURE 5-5 AMPLIFIER ASSEMBLY 848155

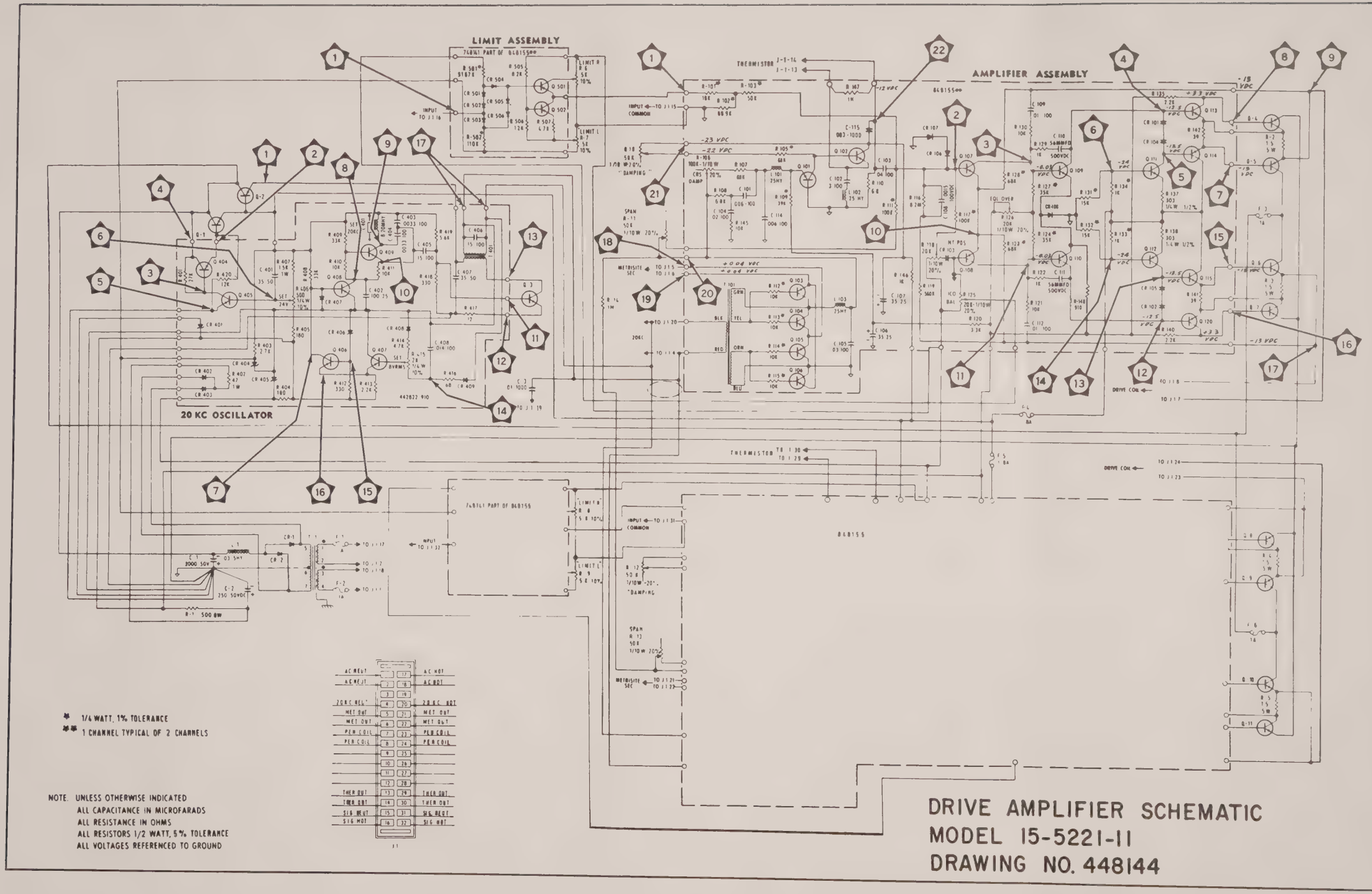
LIMIT ASSEMBLY
AMPLIFIER ASSEMBLY
20 KC OSCILLATOR
THERMISTOR
DRIVE COIL
INPUT COMMON
INPUT TO J1 16
INPUT TO J1 32
SPAN
DAMPING
METBISITE SEC
* 1/4 WATT, 1% TOLERANCE
** 1 CHANNEL TYPICAL OF 2 CHANNELS
NOTE. UNLESS OTHERWISE INDICATED
ALL CAPACITANCE IN MICROFARADS
ALL RESISTANCE IN OHMS
ALL RESISTORS 1/2 WATT, 5% TOLERANCE
ALL VOLTAGES REFERENCED TO GROUND
DRIVE AMPLIFIER SCHEMATIC
MODEL 15-5221-11
DRAWING NO. 448144

WAVEFORM	TEST POINT	SCOPE SETTING				DC VOLTAGE
		SWEEP SPEED	VERT. SENS. V/CM	TRIGGER MODE	TRIGGER POLARITY SOURCE	
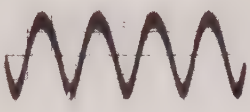	1	20 U SEC/CM	0.02	AUTO	+	-26.5
	2	20 U SEC/CM	0.02	AUTO	+	-26.5
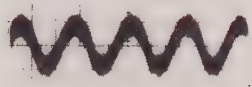	3	20 U SEC/CM	0.02	AUTO	+	-26.7
NONE	4	---	---	---	---	-43
NONE	5	---	---	---	---	0
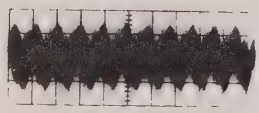	6	5 U SEC/CM	0.01	AUTO	+	-0.07

WAVEFORM CHART, 20 KHz OSCILLATOR (846584) SCHEMATIC NO. 448145 (Sheet 1 of 3)

WAVEFORM	TEST POINT	SCOPE SETTING				DC VOLTAGE
		SWEEP SPEED	VERT. SENS. V/CM	TRIGGER MODE	TRIGGER POLARITY SOURCE	
	7	20 U SEC/CM	0.5	AUTO	-	+0.5
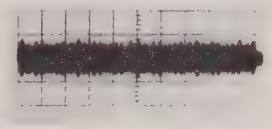	8	10 U SEC/CM	0.02	AUTO	+	-7.6
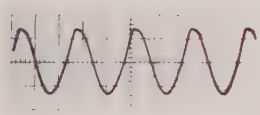	9	20 U SEC/CM	5.0	AUTO	+	-26.5
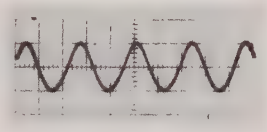	10	20 U SEC/CM	1.0	AUTO	+	-12.5
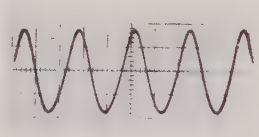	11	20 U SEC/CM	0.5	AUTO	+	-1.2
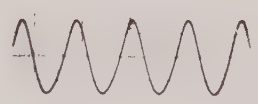	12	20 U SEC/CM	0.5	AUTO	+	-1.1

WAVEFORM CHART, 20 KHz OSCILLATOR (846584) SCHEMATIC NO. 448145 (Sheet 2 of 3)

WAVEFORM	TEST POINT	SCOPE SETTING				DC VOLTAGE
		SWEEP SPEED	VERT. SENS. V/CM	TRIGGER MODE	TRIGGER POLARITY SOURCE	
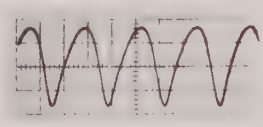	13	20 U SEC/CM	10.0	AUTO	+	-25
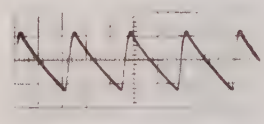	14	20 U SEC/CM	1.0	AUTO	+	+7.3
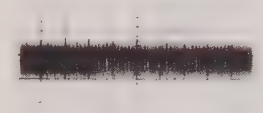	15	20 U SEC/CM	0.01	AUTO	+	+4.9
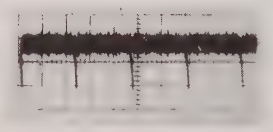	16	20 U SEC/CM	0.02	AUTO	-	+5.0
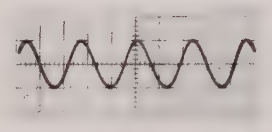	17	20 U SEC/CM	5.0	AUTO	+	---

NOTE: Voltages taken with 5 MM output on chart, 50 CPS.

WAVEFORM CHART, 20 KHz OSCILLATOR (846584) SCHEMATIC NO. 448145 (Sheet 3 of 3)

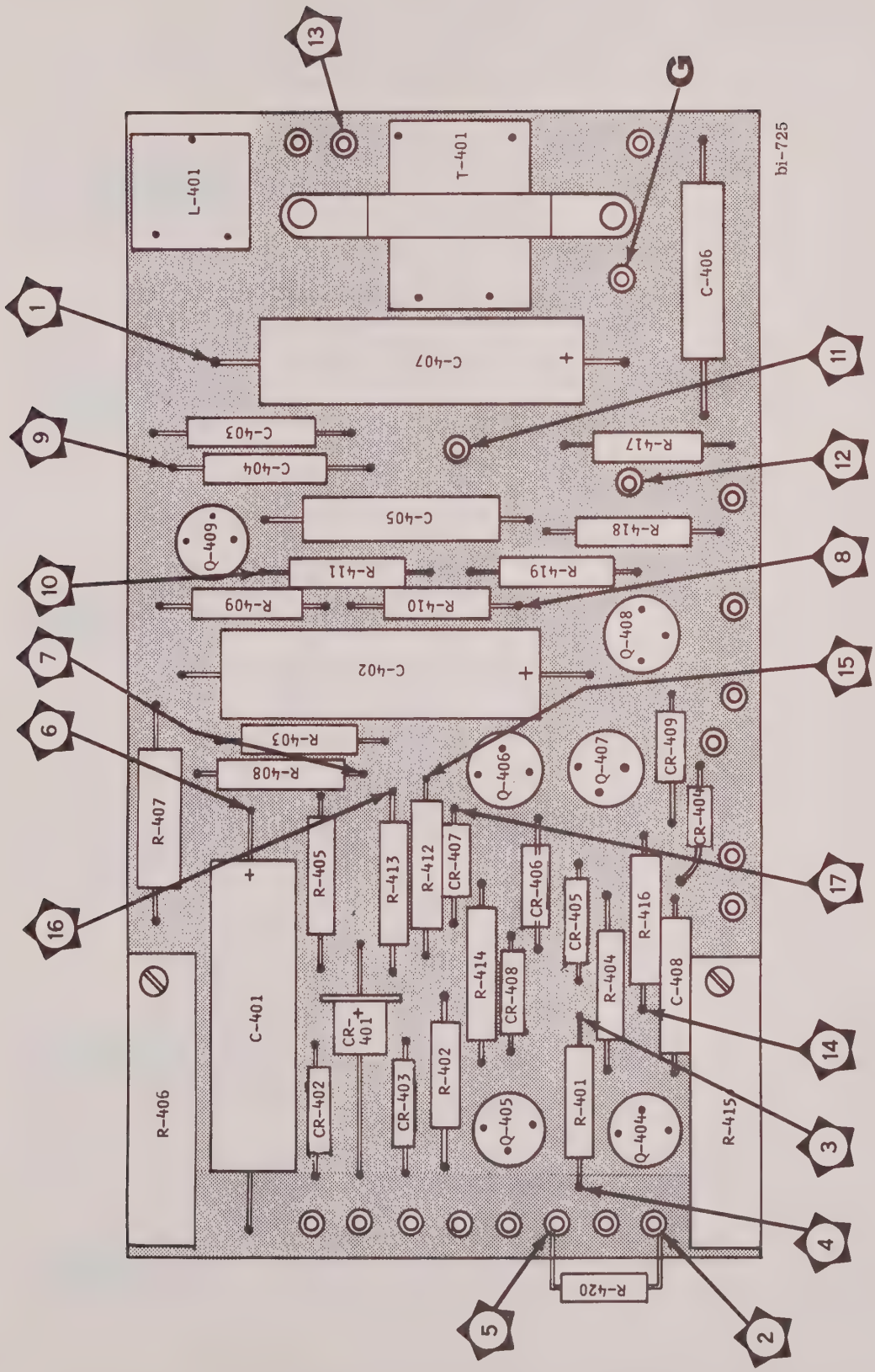

FIGURE 5-6 20KHz OSCILLATOR 846584

WAVEFORM	TEST POINT	SCOPE SETTING				INPUT SIGNAL
		SWEEP SPEED	VERT. SENS. V/CM	TRIGGER MODE	TRIGGER POLARITY SOURCE	
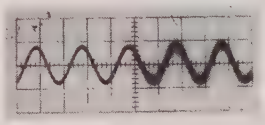	1	10 M SEC/CM	1.0	AUTO	+	50 CPS 20 MM DEFLECTION (25 LINES)
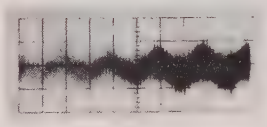	2	10 M SEC/CM	0.01	AUTO	+	50 CPS 20 MM DEFLECTION (25 LINES)
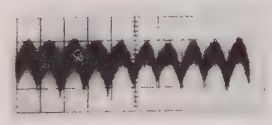	3	10 M SEC/CM	0.01	AUTO	+	50 CPS 20 MM DEFLECTION (25 LINES)
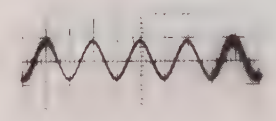	4	10 M SEC/CM	10.0	AUTO	+	50 CPS 20 MM DEFLECTION (25 LINES)
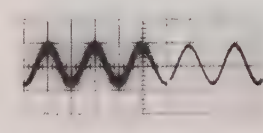	5	10 M SEC/CM	10.0	AUTO	+	50 CPS 20 MM DEFLECTION (25 LINES)
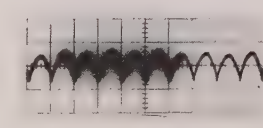	6	10 M SEC/CM	0.1	AUTO	+	50 CPS 20 MM DEFLECTION (25 LINES)

WAVEFORM CHART, AMPLIFIER ASSEMBLY (848167) SCHEMATIC NO. 448145 (Sheet 1 of 4)

WAVEFORM	TEST POINT	SCOPE SETTING				INPUT SIGNAL
		SWEEP SPEED	VERT. SENS. V/CM	TRIGGER MODE	TRIGGER POLARITY SOURCE	
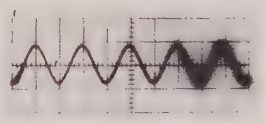	7	10 M SEC/CM	10.0	AUTO	+	50 CPS 20 MM DEFLECTION (25 LINES)
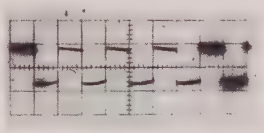	8	10 M SEC/CM	0.5	AUTO	+	50 CPS 20 MM DEFLECTION (25 LINES)
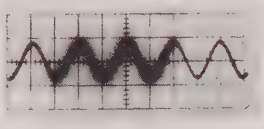	9	10 M SEC/CM	10.0	AUTO	+	50 CPS 20 MM DEFLECTION (25 LINES)
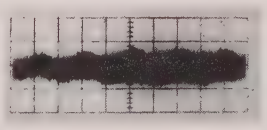	10	10 M SEC/CM	0.01	AUTO	+	50 CPS 20 MM DEFLECTION (25 LINES)
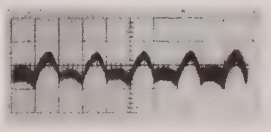	11	10 M SEC/CM	0.02	AUTO	+	50 CPS 20 MM DEFLECTION (25 LINES)
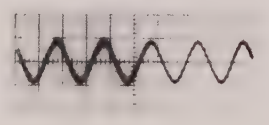	12	10 M SEC/CM	10.0	AUTO	+	50 CPS 20 MM DEFLECTION (25 LINES)

WAVEFORM CHART, AMPLIFIER ASSEMBLY (848167) SCHEMATIC NO. 448145 (Sheet 2 of 4)

WAVEFORM	TEST POINT	SCOPE SETTING				INPUT SIGNAL
		SWEEP SPEED	VERT. SENS. V/CM	TRIGGER MODE	TRIGGER POLARITY SOURCE	
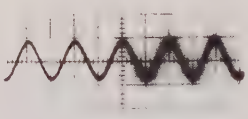	13	10 M SEC/CM	10.0	AUTO	+	50 CPS 20 MM DEFLECTION (25 LINES)
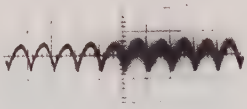	14	10 M SEC/CM	0.1	AUTO	+	50 CPS 20 MM DEFLECTION (25 LINES)
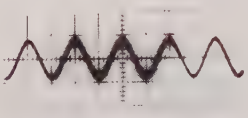	15	10 M SEC/CM	10.0	AUTO	+	50 CPS 20 MM DEFLECTION (25 LINES)
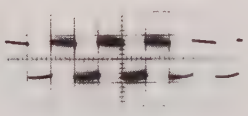	16	10 M SEC/CM	5.0	AUTO	+	50 CPS 20 MM DEFLECTION (25 LINES)
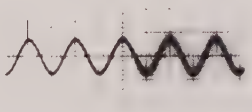	17	10 M SEC/CM	10.0	AUTO	+	50 CPS 20 MM DEFLECTION (25 LINES)
	18	10 M SEC/CM	2.0	AUTO	+	50 CPS 20 MM DEFLECTION (25 LINES)

WAVEFORM CHART, AMPLIFIER ASSEMBLY (848167) SCHEMATIC NO. 448145 (Sheet 3 of 4)

WAVEFORM	TEST POINT	SCOPE SETTING				INPUT SIGNAL
		SWEEP SPEED	VERT. SENS. V/CM	TRIGGER MODE	TRIGGER POLARITY SOURCE	
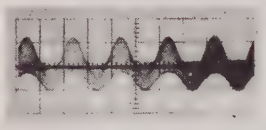	19	10 M SEC/CM	2.0	AUTO	+	50 CPS 20 MM DEFLECTION (25 LINES)
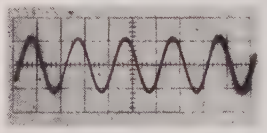	20	10 U SEC/CM	1.0	AUTO	+	50 CPS 20 MM DEFLECTION (25 LINES)
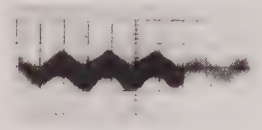	21	10 M SEC/CM	.01	AUTO	+	50 CPS 20 MM DEFLECTION (25 LINES)
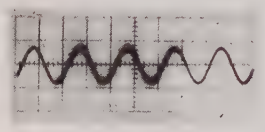	22	10 M SEC/CM	0.5	AUTO	+	50 CPS 20MM DEFLECTION (25 LINES)

WAVEFORM CHART, AMPLIFIER ASSEMBLY 848167 DRAWING NO. 448145 (Sheet 4 of 4)

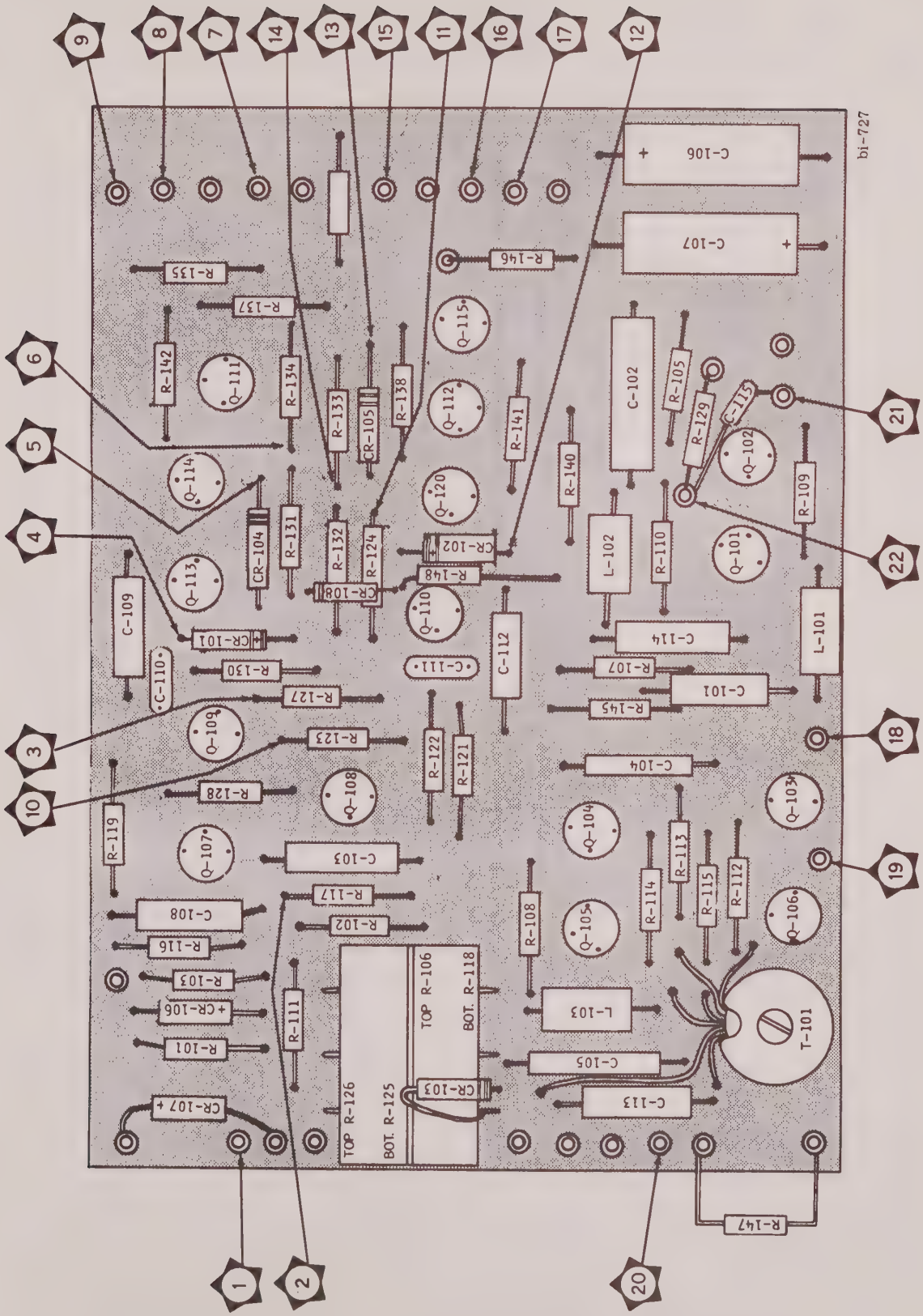

FIGURE 5-7 AMPLIFIER ASSEMBLY 848167

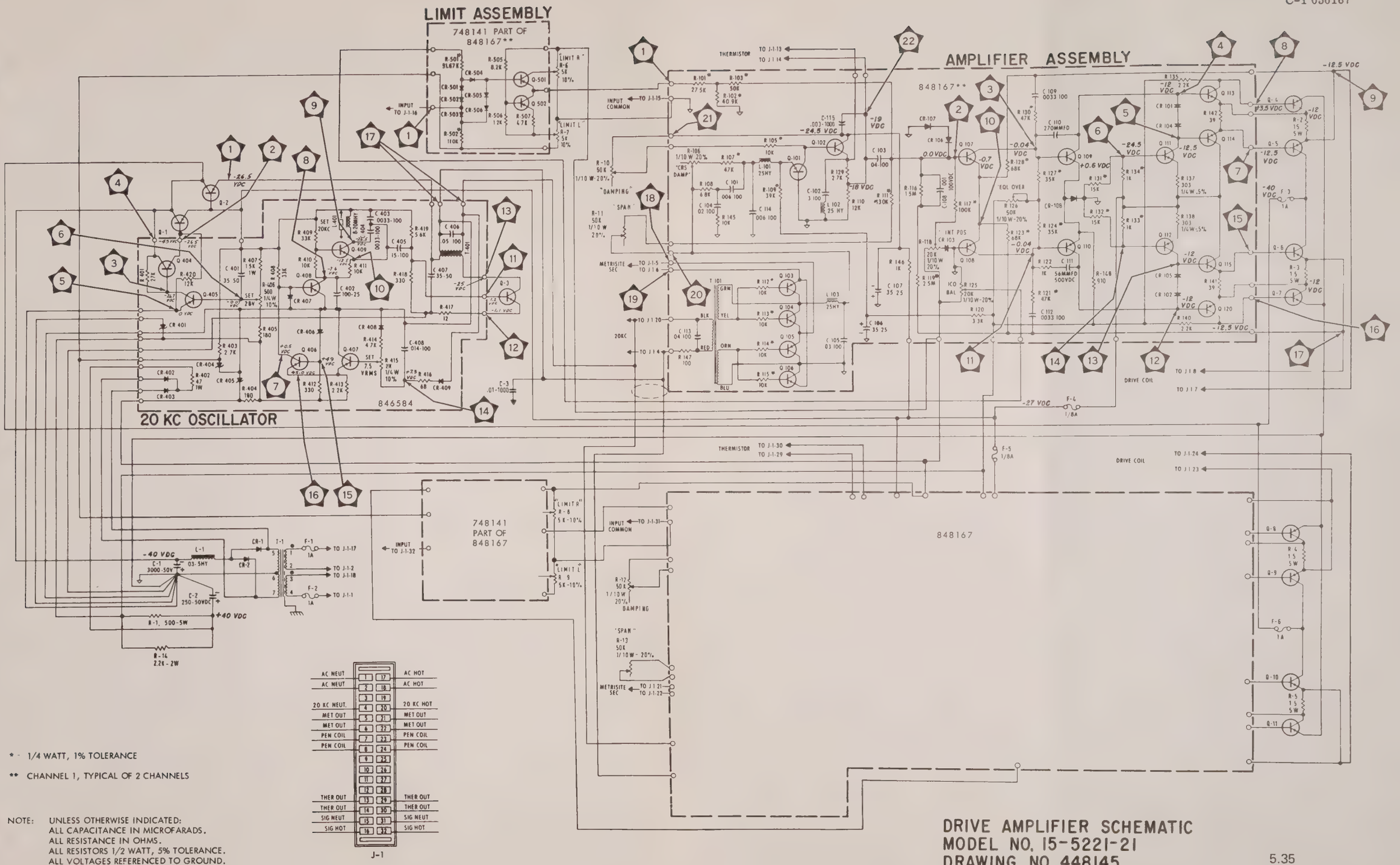

* - 1/4 WATT, 1% TOLERANCE

** CHANNEL 1, TYPICAL OF 2 CHANNELS

NOTE: UNLESS OTHERWISE INDICATED:
ALL CAPACITANCE IN MICROFARADS.
ALL RESISTANCE IN OHMS.
ALL RESISTORS 1/2 WATT, 5% TOLERANCE.
ALL VOLTAGES REFERENCED TO GROUND.

DRIVE AMPLIFIER SCHEMATIC
MODEL NO. 15-5221-21
DRAWING NO. 448145

SECTION VI

MAINTENANCE

6.1 GENERAL

This section describes and illustrates various operators and service maintenance procedures for the Gould 200 Recording system. Paragraphs 6.2 thru 6.24 deal with operators maintenance and paragraphs 6.25 thru 6.41 deal with service maintenance.

6.2 LOADING OR CHANGING CHART PAPER VERTICAL OSCILLOGRAPH

The following procedure describes and illustrates the correct method of loading or changing chart paper.

1. Turn off equipment.
2. Release bezel lock on front of oscillograph (Fig. 6-2).
3. Pull chart paper drawer out as far as possible.
4. Lift paper drag and remove supply roll shaft from chart paper drawer.
5. Remove paper core from shaft.
6. Place chart paper on shaft, so when shaft flange is on the left, paper will feed from roll with printed side up toward operator.
7. Turn paper supply roll shaft, with wrench which is stored in the paper supply drawer, counterclockwise until shaft flange is firmly against paper roll.
8. Place paper supply in drawer. Press in on right end and slide paper supply into position, making certain roll is completely seated, and release paper drag against roll.

NOTE: When installing paper supply, make certain flange is on left as operator faces instrument.

10. Position chart paper over writing bar, down over writing table behind reversible drive roller, then out between pressure roller and drive roller. This is for external operation (Fig. 6-1).

NOTE: Be sure drive roll selector is in the external position (Fig. 6-2).

For internal rewind, thread paper in front of reversible drive roller, back over pressure roller, under guide rods, then attach to top of take-up core (Fig. 6-1).

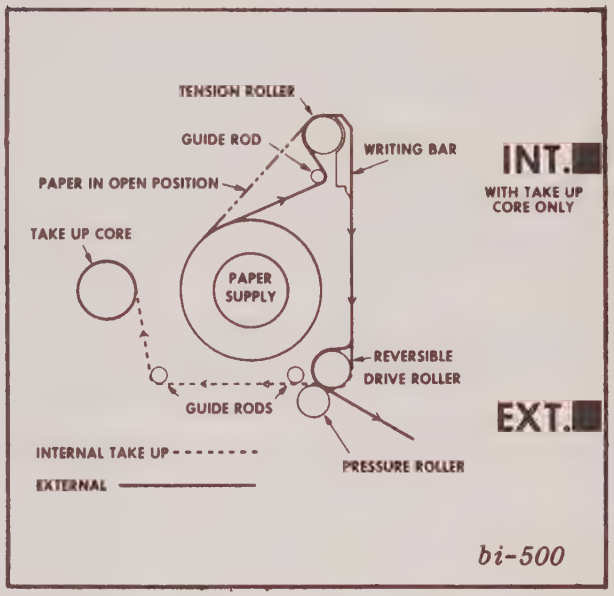

FIGURE 6-1 LOADING CHART PAPER

NOTE: Be sure drive roll selector is in the internal position (Fig. 6-2).

11. Check that the paper edges are an equal distance from side plates at right and left event pens and that event marker pens are centered in margins. A paper centering adjustment is provided on instrument left side plate, but this is factory set and normally requires no readjustment. In the event adjustment is necessary, refer to Paragraph 6.10.

NOTE: Do not slide paper supply right or left on paper supply shaft. The paper core should always be against the flange.

12. Push paper drawer into writing position and engage bezel lock.
13. Operate oscillograph to run out about 10 feet of chart paper to be certain centering is correct and to allow chart tracking to stabilize. If paper is not centered, refer to Paragraph 6.10.

6.3 LOADING OR CHANGING CHART PAPER (HORIZONTAL OSCILLOGRAPH)

The following procedure describes and illustrates the correct method of loading or changing chart paper.

1. Press oscillograph STOP button.

2. Press both release levers (Fig. 6-3) and pull out oscillograph.

3. Lower right side panel assembly (Fig. 6-3).

NOTE: Right and left means operator's right and left as he stands in front and faces unit.

4. Tear off chart paper against serrated edge and push pressure roller release lever (Fig. 6-3) down to release pressure on paper.

5. Pull paper from between drive and pressure rolls.

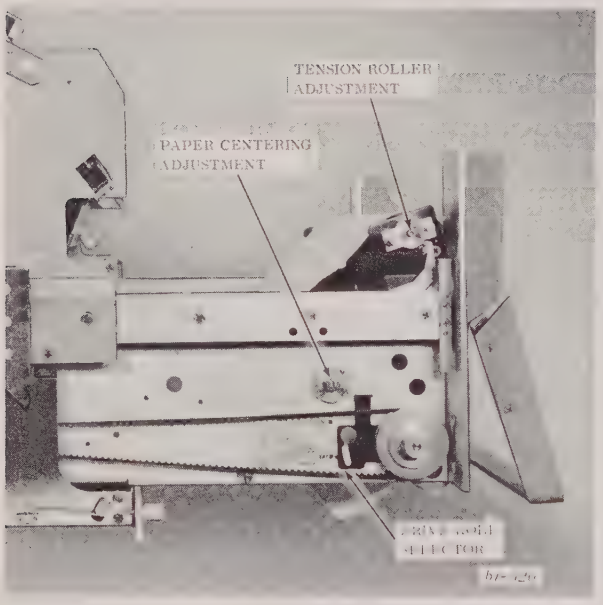

FIGURE 6-2 VERTICAL OSCILLOGRAPH LEFT SIDE

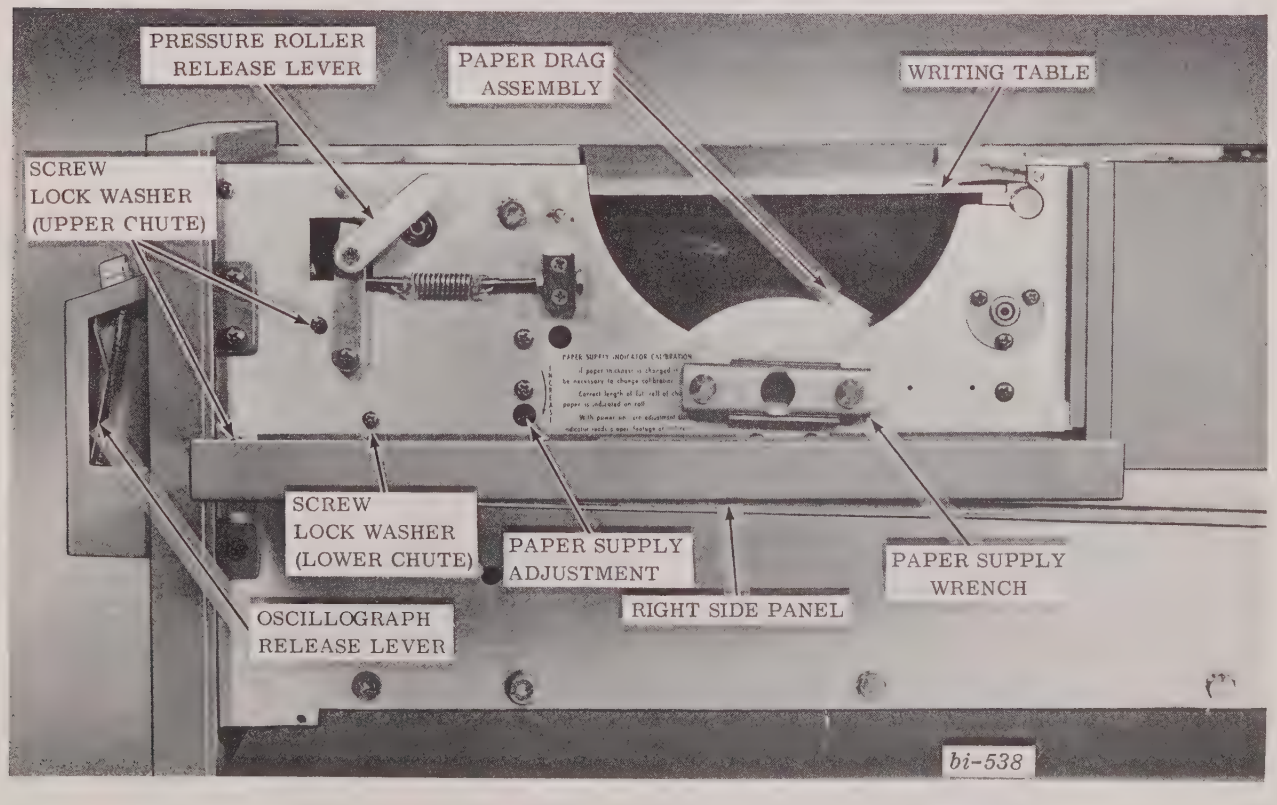

FIGURE 6-3 HORIZONTAL OSCILLOGRAPH RIGHT SIDE

6. Lift front edge of writing table far enough to release ink pressure in pens. This may release droplets of ink under each pen. Slide paper forward along table surface until ink flow stops.

7. The writing table may now be raised to approximately 45° and withdrawn from side plate notches.

CAUTION: CARELESS PAPER LOADING TECHNIQUES MAY RESULT IN DAMAGE TO PENS. KEEP PAPER AGAINST WRITING TABLE DURING REMOVAL AND INSERTION OF TABLE. AVOID CONTACT WITH PEN TIPS.

8. Pull out soiled chart paper, tear off and discard.

CAUTION: INK IS INDELABLE.

9. Raise paper drag assembly up and out of the way to self latching position.

10. Lift paper supply shaft up and out of oscillograph.

11. Remove paper core from shaft with tool stored on right side of oscillograph (Fig. 6-3).

12. Place chart paper on shaft with shaft flange on right side so that paper will feed from under side of roll going away from the operator. Tighten core firmly against flange.

13. When installing paper supply in oscillograph, make certain flange is on the right as operator faces instrument. Press in on left end and slide paper supply into position, making certain shaft is completely seated.

14. Unroll approximately two feet of chart paper and lower paper drag assembly to rest on supply roll.

15. Place the writing table under the unrolled portion of paper, making certain paper is flat against the table and carefully install writing table into position. Avoid touching pens. Press down firmly until snap catch is engaged.

NOTE: The writing table interlock switch will prevent operation of the instrument unless snap catch is engaged.

16. Feed chart paper down into chute between pressure and drive rolls and out front of oscillograph.

17. Pull paper taut and flat over writing table and reset pressure roller.

18. Check that the paper edges are an equal distance from the side plates at the right and left event pens and that the event marker pens are centered in the margins. A paper centering adjustment is provided on the oscillograph left side plate, but this is factory set and normally requires no readjustment. In the event adjustment is necessary, refer to paragraph 6.10.

NOTE: Do not slide paper supply right or left on the paper supply shaft. The paper core should always be kept against the flange.

19. Operate oscillograph to run out about 10 feet of chart paper to be certain centering is correct and to allow chart tracking to stabilize.

6.4 CHART PAPER SUPPLY INDICATOR

After loading chart paper, check PAPER SUPPLY indicator. If indicator does not register correct length of full roll as marked on chart paper roll, adjust indicator according to instructions located on right side of oscillograph.

6.5 INK SUPPLY

The ink is contained in a graduated master cylinder with an indicator to check ink supply at a glance. Normally a two-ounce supply contains sufficient ink for approximately 50 rolls of average recording. To replenish ink supply, the procedure is as follows:

1. Turn off equipment.

2. Loosen four captive thumb screws and pull oscillograph out as far as possible.

3. Unscrew cap from master cylinder (Fig. 6-4 & 6-5).

4. Remove cap from ink syringe.

NOTE: Make sure ink is to tip of syringe to prevent air from entering ink system.

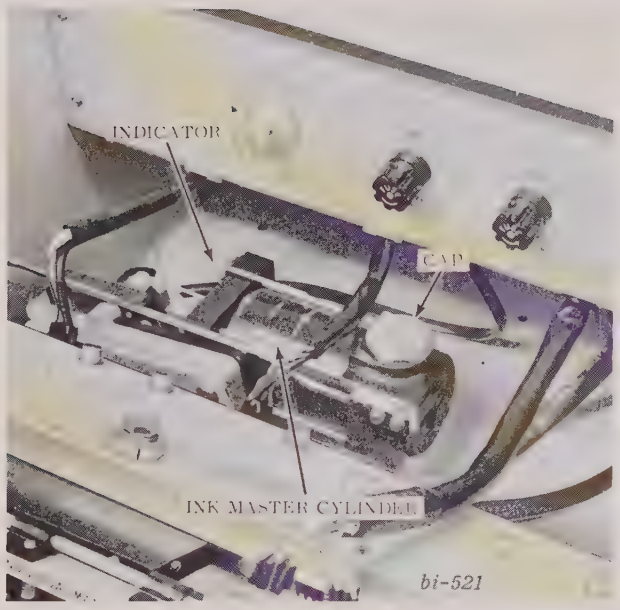

FIGURE 6-4 VERTICAL OSCILLOGRAPH INK MASTER CYLINDER

5. Screw syringe tip into master cylinder in a clockwise direction.

6. Inject ink into cylinder until gage on master cylinder shows just under two ounces.

CAUTION: DO NOT OVERFILL PRESSURIZED INKING SYSTEM. THIS PREVENTS INKING SYSTEM FROM RETURNING TO ZERO PSI WHEN UNIT IS TURNED OFF.

7. Unscrew syringe from master cylinder.

8. Replace cap on master cylinder.

CAUTION: MAKE SURE GASKET IS IN PLACE ON CAP.

9. Replace cap on ink syringe.

10. Install chart paper as descrbed in paragraph 6.2 & 6.3.

11. Push oscillograph into unit and secure.

NOTE: Always keep paper under pen tips and ink in master cylinder. Do not allow until to remain out of service for longer than four hours without ink in the cylinder.

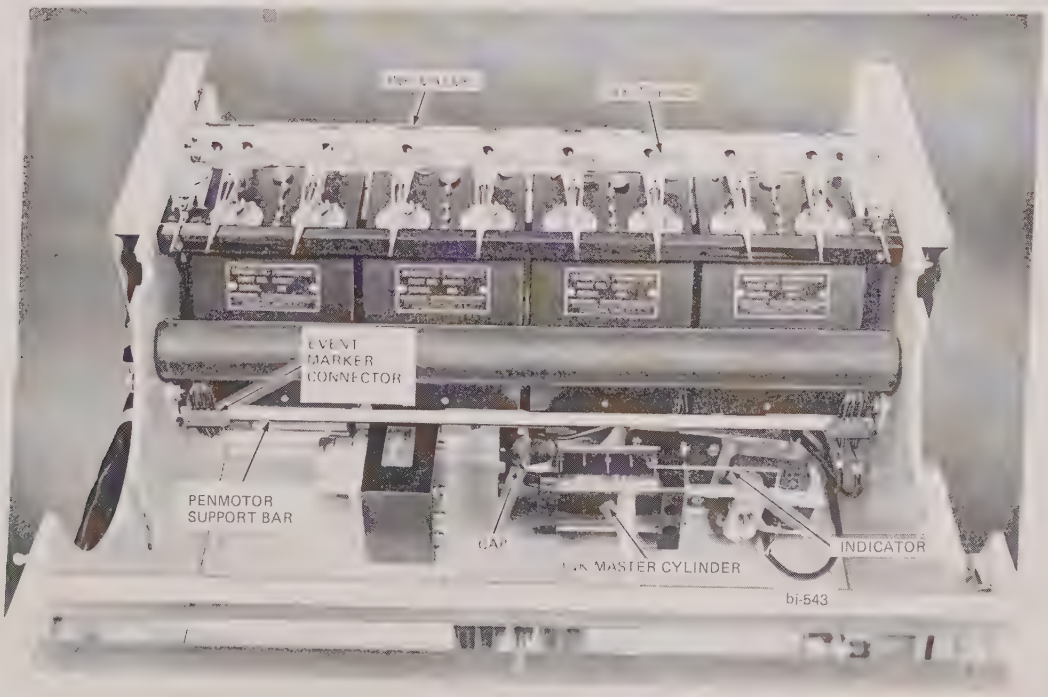

FIGURE 6-5 HORIZONTAL OSCILLOGRAPH INTERIOR-Reference View

6.6 CLEANING AND INSPECTION

a. General

The cleaning and inspection procedures covered in this chapter are limited to normal or common conditions usually encountered.

b. Cleaning

The importance of cleaning must be thoroughly understood by maintenance personnel. The presence of dirt or foreign substances is a constant threat to satisfactory repair. All parts must be cleaned before inspection, after repair and before assembly. Protect all parts from accumulation of dust and grit after cleaning. Avoid getting petroleum products such as dry-cleaning solvents, mineral spirits paint thinner or lubricants on rubber coverings or parts as they will deteriorate.

c. Inspection

Inspect electrical cables for insulation cracks due to excessive heat. Check cables for frayed or worn ends at connectors and check cable clamps for secureness. Check solder connections and printed circuit boards for cracks and proper soldering techniques. Check cable connectors for bent or distorted pins. Check for mechanical tightness including mounting of parts, nuts, screws, and lockwashers. Check for silkscreening clarity and touch-up chipped paint.

6.7 TOOLS AND EQUIPMENT

Tools and equipment listed in Table 6-1 are necessary to perform the maintenance procedures described in this manual. Items marked with an asterisk are shipped with the recorder.

TABLE 6-1 MAINTENANCE TOOLS AND EQUIPMENT

ITEM	PART NO.	REFERENCE		USE
		FIG.	PARA.	
Gage, Gram*	240601-910	6-8	6.12	Used to check pen pressure.
Scale (0-15 pounds)		6-8	6.9	Used to check paper tension.
Tool, Penmotor Band Replacement	341409-915	6-15	6.27	Used for replacing band assemblies on 40mm and 80mm penmotors
Tool, Spanner*	242723-910	—	—	Used to install chart paper
Wrench, Pen Pressure Adjustment*	1-120922-2	6-9	6.13	Used with gram gage to adjust pen pressure
Wrench, Pen Replacement*	1-120922-18	6-13	6.25	Used to replace pen on penmotor

6.8 CHART PAPER TENSION

The back tension or drag on chart paper should be enough to keep paper taut over writing edge of writing bar, but not enough to restrict chart travel. Tension should measure between 7 and 7½ pounds for the vertical oscillograph and between 5 and 12 pounds for the horizontal oscillograph.

The procedure for measuring and adjusting tension is as follows:

1. Pull paper from between drive and pressure rollers.
2. Fold corners at end of chart paper at approximately 45 degree angles to form a point at chart center.
3. Use a suitable clamp or cellophane tape and attach a spring balance scale at folded point of chart paper.
4. Pull spring balance scale parallel to writing table and ahead of drive roller. Measure tension.
5. The tension roller adjustment, located on left side of oscillograph, may be tightened or loosened to obtain required reading. (Fig. 6-2)

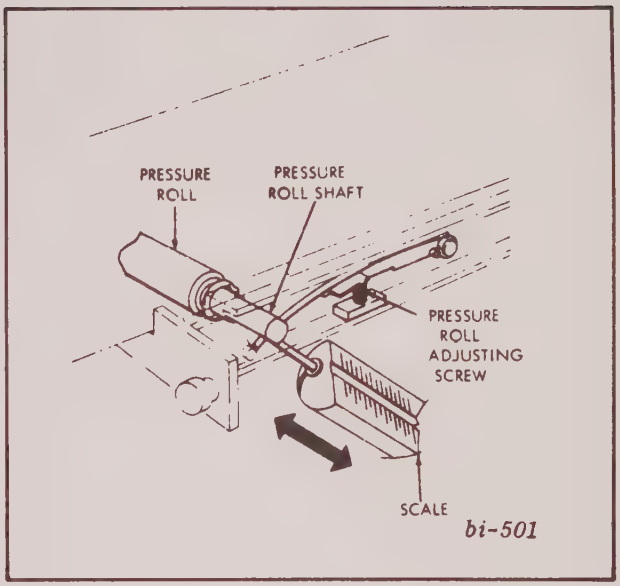

FIGURE 6-6 VERTICAL OSCILLOGRAPH PRESSURE ROLLER ADJUSTMENT

6.9 PRESSURE ROLLER

The force holding pressure roller against drive roller should be 8 ± ¼ pounds as measured at ends of pressure roller shaft. The procedure for measuring and adjusting roller pressure is described below and is the same for both the vertical and horizontal oscillographs.

1. Release bezel lock on front of oscillograph.
2. Remove chart paper from between drive and pressure rollers.
3. Insert a small sample piece of chart paper between pressure roller and drive roller.

NOTE: A separate paper sample must be between each side of drive and pressure rollers before any measurement or adjustment can be made.

4. Engage bezel lock.
5. Hook scale around right end of pressure roller shaft and pull in direction shown in Figure 6-7.
6. Gently pull paper sample on right side at same time as scale.
7. Paper sample should release when scale reading is 8 ± ¼ pounds.
8. If scale reading indicates adjustment is necessary, turn adjusting screw (Fig. 6-7) until proper reading is obtained.
9. Repeat measurment on left end of pressure roller shaft making certain sample paper is between both rollers.
10. Adjust left side in the same manner.

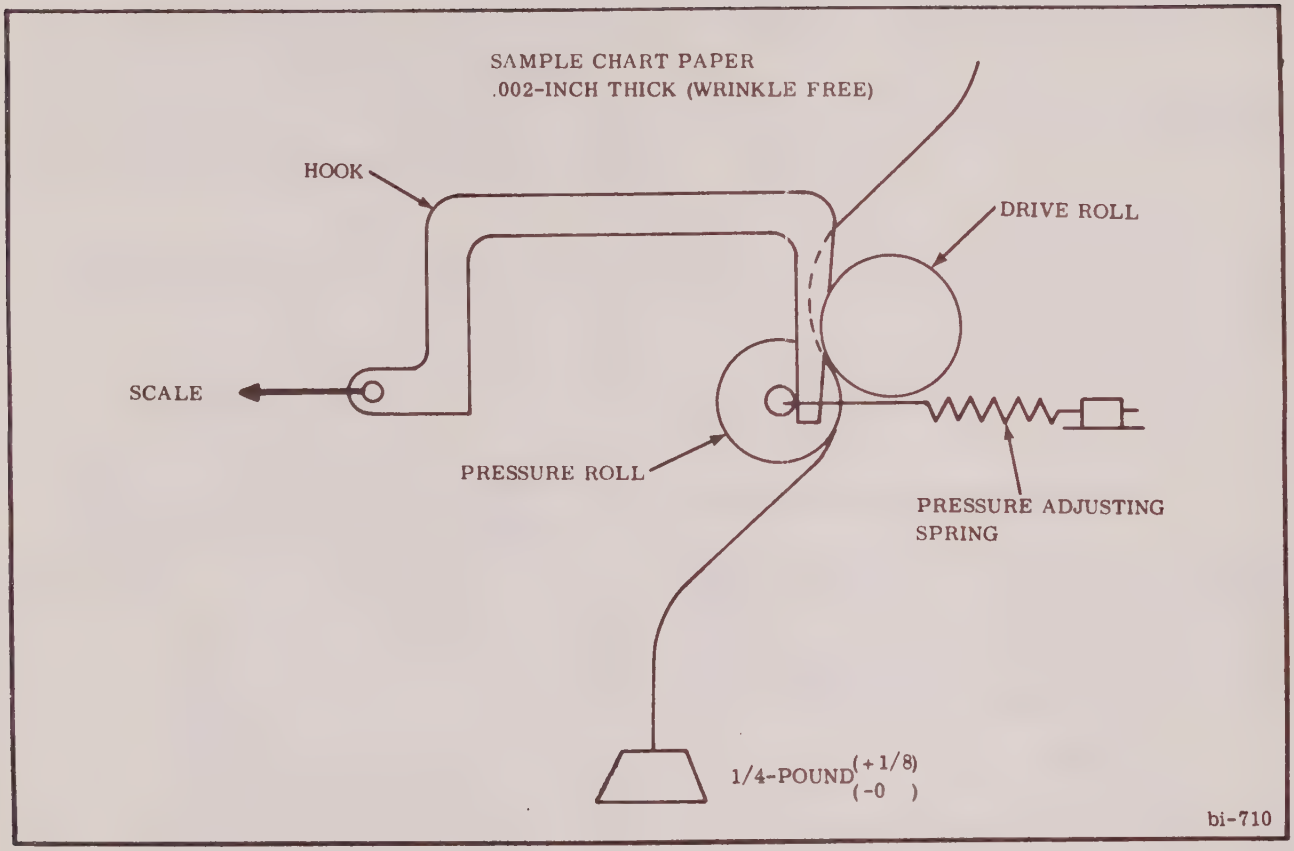

FIGURE 6-7 HORIZONTAL OSCILLOGRAPH PRESSURE ROLLER ADJUSTMENT

6.10 PAPER CENTERING AND TRACKING

1. Check that chart edges are equal distances, within .03 inch, from side plates and that event marker pens are centered in margins. The paper centering adjustment is provided on oscillograph left side plate. (Fig. 6-2).

NOTE: Do not slide paper supply right or left on paper supply shaft. The paper core should always be kept tightly against flange.

2. By turning the adjusment clockwise the paper moves to the right. Counterclockwsie will make the paper move to the left.

3. Operate oscillograph to run out about 10 feet of chart paper to be certain centering is correct and to allow chart tracking to stabilize.

4. Operate oscillograph at 20 millimeters per second and run out 20 feet of chart paper.

5. Chart wander should not exceed .025 inch as paper passes over writing bar. Use event marker trace to chart edge for reference.

6. If chart wander exceeds .025 inch refer to paragraphs 6.8 & 6.9.

6.11 CHART SPEED MEASUREMENT

1. Operate oscillograph at 200 millimeters per second.

2. Measure distance chart moved during one second pulses of event marker.

3. Distance should be one meter ± 2.5 millimeters. Accuracy of chart speed should be within ± 0.25%.

6.12 PEN PRESSURE MEASUREMENT

The gram gage, supplied with the instrument, is used to measure the pressure of both analog and event marker writing pens. The proper writing pressure for analog pens is 28 to 32 grams. The proper writing pressure for event marker pens is 22 to 25 grams. To check pen pressure, proceed as follows:

1. Load chart into oscillograph. Refer to appropriate operating manual.

2. Connect oscillograph to correct power source.

3. Select a slow chart speed.

4. Place gram gage hook under pen shaft, as close as possible to the tip, and form a right angle to the pen shaft with the gage body. (Fig. 6-8)

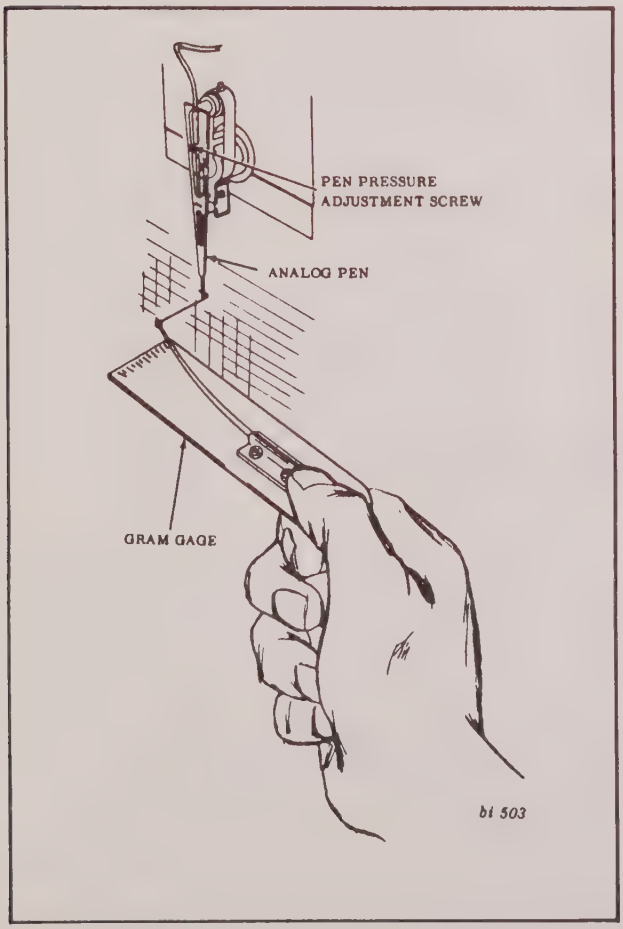

FIGURE 6-8 PEN PRESSURE MEASUREMENT

5. Raise the gage and take reading the moment pen tip leaves surface of the paper. This is noted by an increase in trace width or a blot of ink.

6. If reading is not within specified gram limits, refer to Paragraph 6.13 for pen pressure adjustment.

NOTE: Generally, pen pressure adjustment is not required if analog pen pressure is between 20 and 30 grams or event marker pen pressure is between 20 and 25 grams and pens are writing correctly. Pen pressure under 20 grams may cause bleeding of ink. Over 30 grams (analog pen) or 25 grams (event marker pen) pressure may cause excessive wear and/or friction.

6.13 PEN PRESSURE ADJUSTMENT

Occasionally analog and event marker pens may require adjustment. This is indicated by wide ink traces (insufficient pen pressure) or damage to the chart paper at the pen tip (excessive pen pressure). Pressure adjustments of both analog and event marker pens are described below.

1. Load chart paper into oscillograph. Refer to paragraph 6.2 or 6.3.

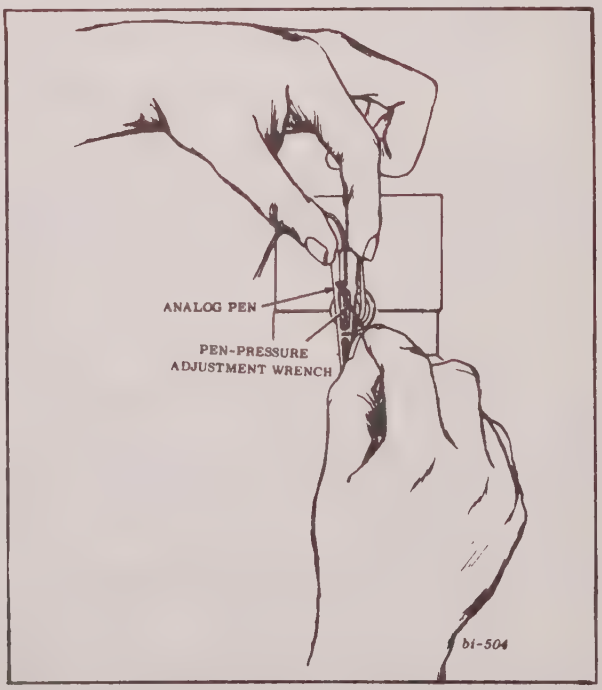

FIGURE 6-9 PEN PRESSURE ADJUSTMENT

2. Connect oscillograph to correct power source.

3. Select a slow chart speed.

4. Measure pen pressure (Para. 6.12).

5. Adjust as required. Turn pen pressure adjustment screw clockwise to increase pressure or counterclockwise to decrease pressure. (Fig. 6-9)

6. Recheck pen pressure with gram gage and continue adjustment until proper reading is obtained.

6.14 LAPPING WRITING PENS

Whenver a replacement pen is installed or traces of pens are not uniform, it may be necessary to lap the pens.

a. Analog Pens

1. Place a small strip of emery paper under pen tip. Use paper supplied with unit or equivalent.

CAUTION: DO NOT LIFT PENS HIGHER THAN IS NECESSARY TO PLACE PAPER UNDER PEN TIP.

3. Hold emery paper with one hand and place index finger of other hand at one side of writing pen. (Fig. 6-10)

4. Gently move the pen right, then left full scale, making approximately 10 passes over emery paper.

NOTE: Use a new area of paper on each pass.

5. Remove the emery paper carefully and proceed to next pen.

b. Event Marker Pens

1. Connect oscillograph to correct power source.

NOTE: It is necessary for the oscillograph to be operating in order to lap event marker pens.

2. Place a small strip of emery paper, supplied with unit, under pen tip and hold in place.

3. Select a slow chart speed and allow to operate for 20 to 30 seconds with the event marker switch in the 1 second position.

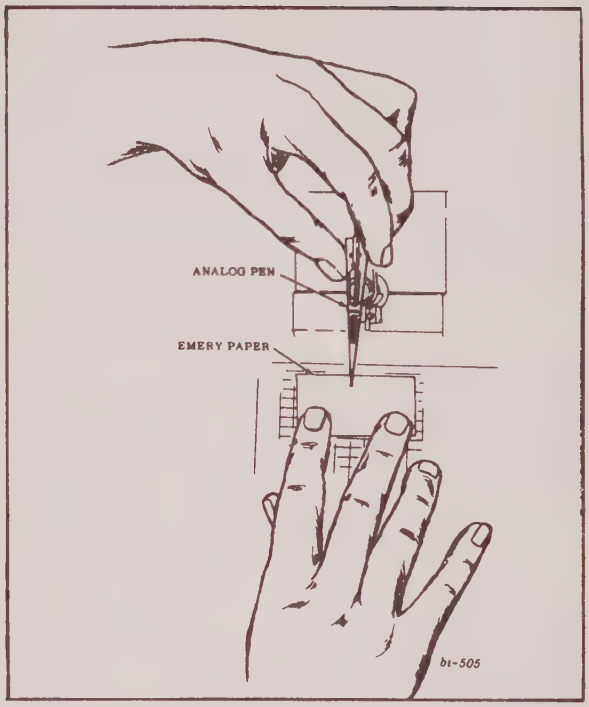

FIGURE 6-10 LAPPING ANALOG PEN

4. Press STOP button and remove emery paper.

6.15 PEN CLEANING

In the event that a pen should fail to write or displays intermittent writing it may be caused by a clogged pen. The procedure outlined below is intended as a guide to flush the pens, but may not always prove effective:

1. Turn off recorder.

2. Close ink valve on affected channel.

3. Remove ink tubing from ink manifold. Should brass nipple pull out of ink valve when removing ink tubing, clean and re-insert in valve.

4. Remove pen from penmotor drive arm. (Para. 6.25).

NOTE: Do not remove tubing from pen unless tubing is kinked or suspected of being defective. Use Gould Part No. 667630 for analog pen tubing and Part No. 644728 for event pen tubing.

5. Modify hypodermic needle per Figure 6-11.

6. Attach modified needle onto 2 cc hypodermic syringe.

7. Insert needle into pen tubing.

8. Immerse pen tip in cleaning agent. (Isopropyl Alcohol, Cell-O-Solve or equivalent).

9. Back-flush, using syringe plunger.

NOTE: It may be necessary to allow the pen to remain in the cleaning agent to dissolve dried ink at the tip.

10. Install pen (Para. 6.25).

NOTE: Clogging of pens occurs only when proper adjusment, operation and/or handling as per Gould Operating Manual has not been adhered to.

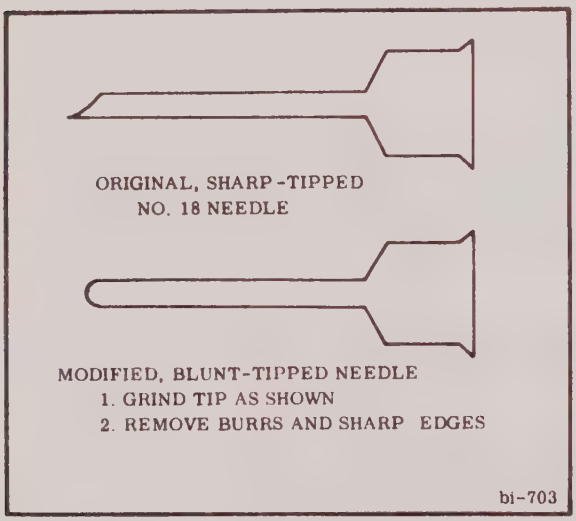

FIGURE 6-11 HYPODERMIC NEEDLE MODIFICATION

6.16 MAINTENANCE TIPS ON INK SYSTEM

The following tips are supplementary to the maintenance procedures described in this section and are recommended for maximum performance and trace quality.

1. Never allow water to enter the inking system or pen. It can precipitate the dye out of the ink and cause clogging. For cleaning use ethyl alcohol or an ethylene glycol ether compound.

2. If ink accumulates at the pin tip after chart drive is shut off and pen tip is raised, there is probably air in the lines. Air can enter when a pen is changed or the writing table is left open and will cause skipping of the trace. To eliminate this, run chart at a slow speed and lift the pen tip away from the chart slightly. Allow ink to bleed until air pockets have escaped from the pen tip. Wipe the excess ink with a tissue stroking towards chart center to avoid staining the writing table.

3. When replacing plastic ink tubing after changing a pen or ink cartridge, be sure the tubing fits snugly over the mating parts. Damaged tubing, or tubing with ink on it can cause trouble. Ink acts as a lubricant and may cause a loosely fitted tube to slip off.

4. Never use the shut-off valves in the system to throttle ink flow. They are intended to be either fully open or closed. Also it is best not to shut off ink to unused channels because the ink lubricates and reduces pen tip wear and prevents paper particles from clogging the pen.

5. Always store the recorder with the pen tip against the paper, for exposure to the atmosphere will dry the ink at the tip. Should this occur, simply operate the chart drive and heat the pen tip with a soldering iron and lift the pen slightly to allow the dried ink to flush out. Should this fail to unclog the pen, refer to the paragraph on pen cleaning in this section.

CAUTION: DO NOT USE AN OPEN FLAME TO PERFORM THIS OPERATION AS THE INK IS FLAMMABLE.

6. Should the need arise to clean up any ink after changing pens or cartridges use ink remover cream, Gould part number 282920.

6.17 OSCILLOGRAPH ELECTRICAL INSPECTION

1. Disconnect oscillograph from power source.

2. Measure the electrical isolation of all wires on J-701 except pin J to chassis. Resistance should be at least 10 megohms.

3. Connect oscillograph pins C & D on J-701 to A.C. line and select a chart speed of .05MM/ Second.

4. With the line voltage at 115VAC the 28 Volt supply should measure 28 ±2 volts D.C. at connector J-701 terminal "M".

5. Lower A.C. line to 105VAC and check all chart speeds and relays for proper functioning without chattering. Check event markers and ink supply motor for proper actuation.

6. Insert an empty paper core into the recorder and see that the paper supply indicator reads zero.

7. Chart drive interlock light should be lit with the empty paper core in the unit and chart speeds should be disabled.

8. Replenish chart paper and set A.C. line voltage for 115 ±2VAC. Turn event markers on and run chart at highest speed.

9. Measure the power consumed with a wattmeter connected in the power line. 90-140 watts is normal for a 60Hz unit; 50Hz units draw approximately 15 watts more and 400Hz units draw approximately 100 watts more.

6.18 SYSTEM POWER PANEL INSPECTION

a. Mechanical

1. Check panel front for scratches and legibility.

2. Check power switch spring clips to see that lamp is secure in panel.

3. Power cable must be attached to rear panel with cable clamp.

b. Electrical

NOTE: Refer to wiring diagram 444120 for wire sizes and connections. All leads not indicated as having a through connection must be isolated from each other and the panel by at least 10 megohms at 250 volts D.C. Perform a continuity check on the circuit if the following electrical checks are not within limits.

1. From a fused variable voltage source, supply to terminals 2 and 4 of terminal board TB-11 a gradually increasing (0 to 125 volts rms at 60 cps) voltage with 500 watt load across terminals 1 and 2. (Load may be 500 watts of light bulbs at 115 volts).

2. Turn power switch to ON position. Pilot lamp should start to glow at 100 volts rms minimum.

3. Increase voltage to 115 volts. Normal, uniform illumination of pilot lamp should result.

4. Turn power switch to OFF position. Pilot lamp and load should both go off.

5. Check A.C. voltage drop from terminal 4 to terminal 2. With power switch in ON position and 500 watt load operation, line drop should be less than 0.2 volts.

CAUTION: DO NOT OPERATE POWER SWITCH WHILE METER IS ACROSS TERMINALS 4 AND 2 BECAUSE 115 VOLTS CAN BE APPLIED TO METER.

6. Perform above line drop test across terminals 3 and 1.

6.19 MAIN CONNECTOR PANEL INSPECTION

a. Mechanical

1. Check to be sure key on connector J-701A is positioned toward bottom of panel.

2. Connection on underside of terminal board TB-1 must clear mounting plate by 1/16-inch minimum.

b. Electrical Checks

1. Check all connectors for bent or distorted pins.

2. Check leads for frays or poor solder connections.

3. Refer to writing diagram 448080 and perform a continuity check.

6.20 DRIVE ASSEMBLY INSPECTION

1. Test relay and connector assembly for continuity using wiring diagram 448320. Isolation

of 10 megohms at 250 volts D.C. between wires is considered minimum.

2. Make sure contacts on relays are clean to insure proper operation.

3. Check for mechanical tightness of parts, nuts, screws, and lockwashers.

4. Make sure all fuses are of correct amperage.

5. Check wiring for burned or scorched insulation, dress or lacing, and use of cable clamps and insulation, where required.

6.21 AMPLIFIER CALIBRATION UNIT INSPECTION

a. Mechanical

NOTE: Perform the following inspection only if amplifier calibration unit has been disassembled.

1. Make sure pushbuttons are centered in their clearance holes and operate freely.

2. Each button should latch easily and release other buttons properly.

3. Make sure legends on pushbuttons are correct for corresponding channel.

4. Wiring should be dressed so that it is neat and not in danger of being pinched or damaged by switch or relay operation.

5. Make sure all wires are soldered and that solder has flowed properly, especially where there is more than one wire on a terminal.

6. Check for burned or scorched wiring insulation, terminations, and lengths. No strain should be placed on pushbutton switch by the wiring.

b. Electrical

NOTE: Amplifier calibration unit and calibration relay assembly installed in system.

1. Depress channel selector OFF button.

2. Connect amplifier calibration unit cable connector P-170 to J-170 on calibration relay assembly.

3. A straight-thru connection of less than ½ ohm should exist between same numbered terminals on TB-184 to TB-184A, TB-183 to TB-183A, TB-182 to TB-182A, and TB-181 to TB-181A.

NOTE: Terminal boards TB-181 thru TB-184 located on drive amplifier frame and TB-181A thru TB-184A located on calibration relay assembly.

4. There should be a minimum of 10 megohms resistance between both the calibration unit and relay assembly terminals and the chassis (except for pin 5 on TB-160).

5. Connect power to TB-106. Refer to wiring diagram 262352.

6. Depress power switch pushbutton. Power switch should light.

7. Depress pushbutton for first channel on channel selector switch. The pushbutton should light.

8. The relay voltage should be a positive 24 volts D.C. ±4 volts and must remain above +20 volts with a line voltage variation of 103 volts to 128 volts A.C.

9. Depress each of the eight channel selector pushbuttons in turn and check for 24 volts D.C. ±4 volts at P-170 connector pins. Refer to wiring diagram 262352 for corresponding pin connections.

10. At relay assembly, check to see that each relay is actuated as corresponding channel selector pushbutton is pressed.

11. After testing all channels, press channel selector OFF pushbutton. Voltage to relays should go to zero and pushbutton light should go out.

c. Multimarker Wiring Check

NOTE: Whenver a multimarker penmotor is used, additional wiring is added to the two adjacent relays on relay assembly.

1. Depress MMH pushbutton (substituted for channel pushbutton when multimarker is used) on channel selector switch.

2. Continuity of less than ½ ohm should occur between terminals 5 and 6 on connections to TB-184 on drive amplifier frame.

3. Depress MML pushbutton (substituted for channel pushbutton when multimarker is used) on channel selector switch.

4. Continuity of less than ½ ohm should occur between terminals 5, 6 and 7 on connections to TB-184 on drive frame.

6.22 DATA LOSS SENSORS INSPECTION

a. Mechanical

1. Move pen ±25 divisions on chart paper and observe sensor contact action. If properly adjusted, contacts will close when pen is approximately 1mm beyond chart extremes.

NOTE: Check that sensor inner contact, on 80mm penmotor, is insulated from pen drive arm and that sensor adjusting screws on 40mm penmotor have nylon tips.

2. Adjust sensor contacts as follows:

   2a. Check pen skew (pen should write parallel to time lines).

   2b. Check that contacts are perpendicular to printed circuit boards and not bent out of position.

   2c. Adjust sensor contacts for a nominal gap of 0.04 inch (80mm penmotor) or 0.005 to 0.010 inch (40mm penmotor) using nylon tipped set screws (Fig. 6-12)

b. Electrical (static)

NOTE: Refer to wiring diagram 263328 and perform the following checks.

1. Check that wires and panel are isolated from each other by at least 10 megohms at 250 volts D.C.

2. Diode and Relay Check (LOAD)

NOTE: Relay PICKUP adjustment control to be in full counterclockwise position.

Apply 26 ± 0.5 volts D.C. to connectors J-195A and J-196A and read continuity (less than 2 ohms) on connector J-197 as follows:

NOTE: Check with both polarities of D.C. voltage to detect defective diodes.

TEST VOLTAGE CONNECTOR	PINS	OHMMETER ACROSS J-197 PINS	"LOAD" LIGHT
J-195A	11-12	B-C	Illuminates
J-195A	8-9	E-F	Illuminates
J-195A	5-6	J-K	Illuminates
J-195A	2-3	M-N	Illuminates
J-196A	11-12	R-S	Illuminates
J-196A	8-9	U-V	Illumintates
J-196A	5-6	X-Y	Illuminates
J-196A	2-3	AA-BB	Illuminates

3. Diode and Relay Check (EDGE)

Apply 13 ±0.5 volts D.C. to connector J-195A and J-196A and read continuity (less than 2 ohms) on connector J-197 as follows:

TEST VOLTAGE CONNECTOR	PINS (-) (+)	OHMMETER ACROSS J-197 PINS	"LOAD" LIGHT
J-195A	11-10	B-C	Illuminates
J-195A	8-7	E-f	Illuminates
J-195A	5-4	J-K	Illuminates
J-195A	2-1	M-N	Illuminates
J-196A	11-10	R-S	Illuminates
J-196A	8-7	U-V	Illuminates
J-196A	5-4	X-Y	Illuminates
J-196A	2-1	AA-BB	Illuminates

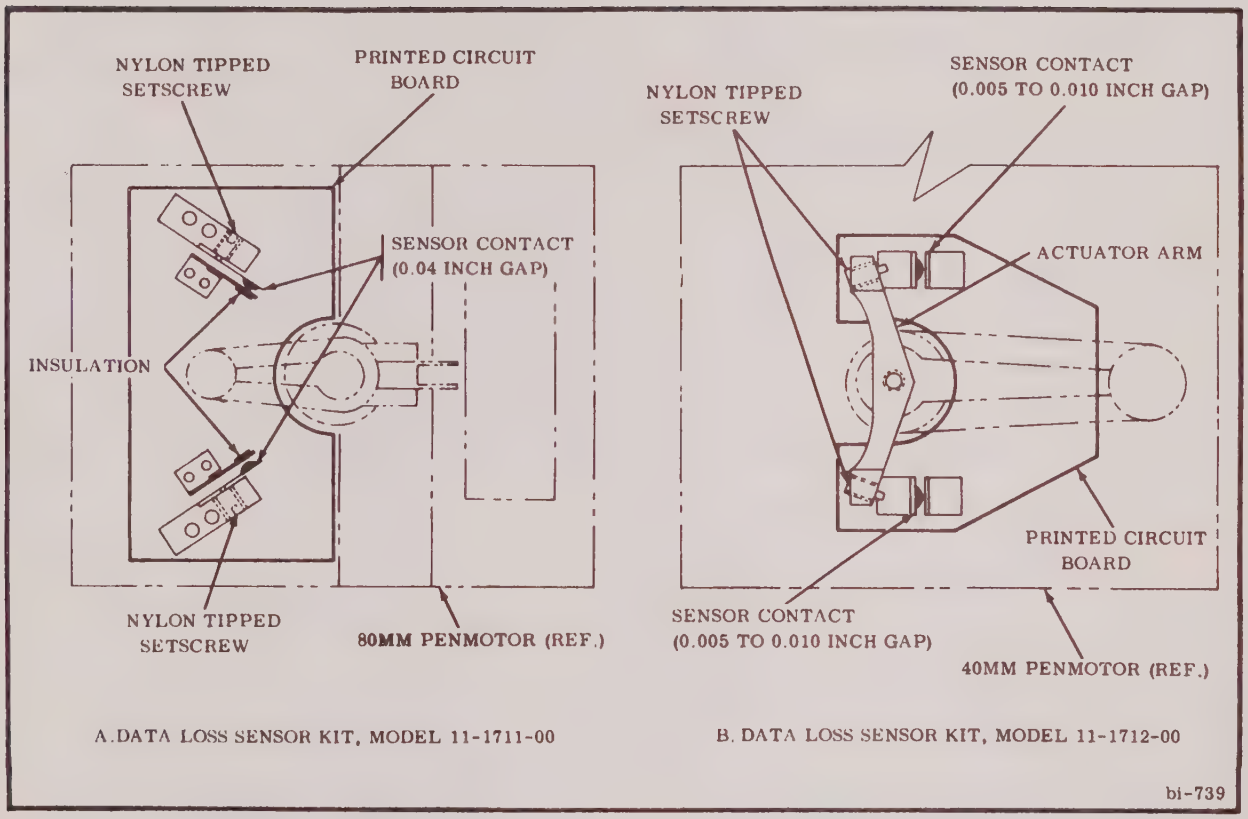

FIGURE 6-12 DATA LOSS SENSOR CONTACT ADJUSTMENT

c. Electrical (dynamic)

LOAD Checks

1. Operate each recorder channel with a sine wave signal to produce 10mm deflection. Set RELAY PICKUP adjustment control to energize data loss relay at 110 ±5 cycles per second. LOAD lamp should light. If not check sensor contact adjustment and continuity (Section V).

2. Operate each recorder channel with a sine wave signal to produce full scale defelction. On 40mm channels, data loss relay will be energized by a signal between 38 to 50 cycles per second and LOAD lamp will light. On 80mm channels, data loss relay will be energized by a signal between 19 and 31 cycles per second and LOAD lamp will light.

EDGE Check

1. Operate recorder at a slow speed and, using pen position control of preamplifier, run pen off chart in both directions. Data loss relay of each corresponding channel should energize and EDGE lamp should light. Refer to Section V of this manual for adjusting sensor contacts.

6.23 INTERCHANNEL EVENT MARKER INSPECTION

a. Mechanical

1. Check and adjust pen pressure (Para. 6.12 and 6.13).

2. Lap pen tip if trace density varies from pen to pen with chart speeds above 0.2 millimeters per second.

3. Check that cable leads are isolated from each other and from cable shield by 10 megohms at 250 volts D.C.

6.24 MULTI-CHOICE TIMER

a. General

The multi-choice timer, Model 11-2101-40, consists of two inter-geared cams driven by a synchronous motor, with each cam triggering separate switches. One cam rotates once per second and, thru its switch, energizes event marker with a 100 millisecond pulse at one second intervals. The selector cam produces a similar pulse every 10, 20, 30, or 60 seconds. Thus, depending upon position which is selected manually, there are 9 deflections to right, 1 to left, or 19 right and 1 left, or 29 right and 1 left, or 59 right and 1 left.

b. Setting Timer

1. Pressure oscillograph STOP button.

2. Turn off instrument.

3. Remove rear cover from oscillograph.

4. Disconnect timer leads from terminals 1,2,4, 5 and 6 at rear of oscillograph.

5. Press release lever and pull oscillograph out as far as possible.

6. Remove paper supply roll (Para. 6.2 or 6.3).

7. Remove two timer mounting screws from underside of oscillogrpah and remove timer from inside oscillograph.

8. Remove four screws and lockwashers and remove cover from timer.

9. Remove screw securing selector cam in position.

10. Rotate selector cam to choice of setting (10, 20, 30, or 60 seconds).

NOTE: The 10 second position on the event marker swtich changes to the setting on the timer.

11. Install screw to lock selector cam in position.

12. Replace cover and install four screws and lockwashers.

13. Position timer in oscillograph and secure with two screws installed from underside of oscillograph.

14. Connect leads to terminals at rear of oscillograph as follows:

Terminal	Lead Color
1	Black
2	Black
4	Yellow
5	Green
6	Blue

15. Install paper supply roll (Para. 6.2 or 6.3).

16. Slide oscillograph back into unit.

6.25 ANALOG PEN REPLACEMENT

a. Removal

NOTE: Removal and installation procedures for the 40mm and 80mm penmotor pen are identical.

1. Raise control panel on vertical oscillograph to gain access to pens. Pens are accessible on horizontal oscillograph.

2. Slide individual ink valve to OFF position.

NOTE: Each pen has an individual ink valve. Slide valve to the OFF position.

3. Disconnect pen tubing at manifold.

CAUTION: DO NOT PULL TUBING FROM MANIFOLD AS THIS MAY DAMAGE MANIFOLD. CAREFULLY WORK TUBING DOWN AND THEN SLIDE FROM MANIFOLD.

4. Loosen set screw securing pen to drive arm hub using 0.033-inch wrench (1-120922-18). Set screw is located on side of hub (Fig. 6-13).

NOTE: Do not loosen screw more than one-half turn or pen will not come out of hub.

5. Carefully slide pen up and out of penmotor drive arm hub.

b. Installation

1. Carefully slide pen down into penmotor drive arm hub.

2. Gently tighten set screw that secures pen into drive arm hub.

NOTE: This is not a final setting.

3. Carefully slide pen ink tubing into manifold. Be careful to avoid kinking or creasing. Do not use tweezers or other sharp instruments to install tubing.

4. Load chart paper. Refer to paragraph 6.2 or 6.3

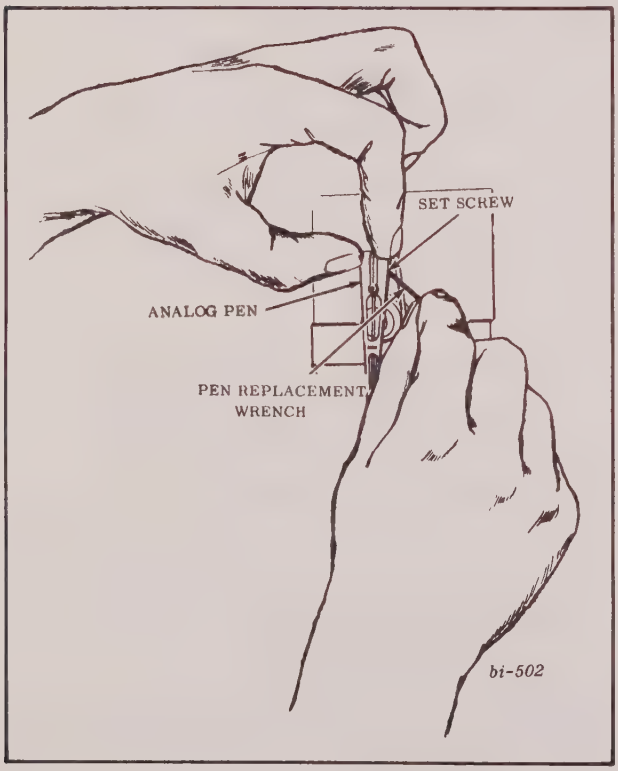

FIGURE 6-13 ANALOG PEN REPLACEMENT

5. Slide individual ink valve to ON position.

6. Connect oscillograph to correct power source.

NOTE: Power source to be 115 volts nominal ±10%, 60 cps, 425 watts nominal. Maximum of 500 watts.

7. Start the chart paper moving by selecting a slow chart speed.

8. Lift pen slightly to allow ink to feed thru pen tip.

9. Stop chart so that pen tips are close to a timing line on chart paper.

10. Grasp rear of pen and push pen across channel width. The trace should be parallel within .005 inch to a time line running across channel width.

NOTE: If adjustment is necessary, loosen set screw and gently turn pen in hub of pen motor until pen tip, at maximum swing, is same distance from timing line as when pen is centered.

11. Tighten set screw securing pen in penmotor drive arm.

12. If pen tip is not on same time line as other analog pens, loosen two pan head adjustment screws on top of pen and slide pen up or down until all pen tips are on the same time line, and tighten screws.

13. Check pen pressure (Para. 6.12).

14. Lap pen (Para. 6.14).

15. Slide oscillograph back into system and secure.

6.26 EVENT MARKER PEN REPLACEMENT

a. Removal

1. Raise control panel on vertical oscillograph to gain access to pens. Pens are accessible on horizontal oscillograph.

2. Slide individual ink valve to OFF position.

NOTE: Each pen has an individual ink valve. Slide valve to the OFF position.

3. Disconnect pen tubing at manifold.

CAUTION: DO NOT PULL TUBING FROM MANIFOLD AS THIS MAY DAMAGE MANIFOLD. CAREFULLY WORK TUBING DOWN AND THEN SLIDE FROM MANIFOLD.

NOTE: On the multimarkers, pens are mounted thru shaft on penmotor. Ink tubing must also be removed from pen.

4. Loosen, but do not remove, two screws securing pen to event marker.

5. Slide pen down from event marker penholder support.

b. Installation

1. Slide event marker pen onto penholder support and adjust position so that tip is at same time line position as other pens and centered in space between channels.

2. Secure pen in position by tightening two screws loosened in a.step 4.

3. Insert pen tube onto manifold being careful to avoid damage to the pen or tubing.

NOTE: Do not use tweezers or other sharp instruments when installing tubing.

4. Load chart paper. Refer to paragraph 6.2 or 6.3.

5. Slide individual ink valve to ON position.

6. Connect oscillograph to correct power source.

7. Lap pen as described in paragraph 6.14.

8. Set pen pressure as described in paragraph 6.13.

6.27 PENMOTOR BAND REPLACEMENT

The band assembly (680294 for 40mm penmotor and 684409 for 80mm penmotor) is never removed unless it is broken. A band replacement tool (341409-915) MUST be used to replace band assembly because the band tension is critical.

a. Removal

1. Remove pen (Para. 6.25).

2. Remove screw and washer securing band assembly to drive arm (Fig. 6-14).

3. Remove two screws and washers securing band assembly to drive arm bracket. Discard broken band assembly.

b. Installation

1. Position new band assembly around drive arm assembly hub and install screw and washer into hub. Do not tighten screw.

NOTE: Be certain curved washer is positioned to conform to the radious of the drive arm assembly hub.

2. Align the two screw mounting holes in the band assembly with tapped holes in drive arm bracket and install two screws and washers. Do not tighten.

3. Inspect band for proper positioning around drive arm assembly hub so that equal pressure is maintained on the top and bottom of the band assembly.

4. Install band adjusting tool per Figure 6-15, securing knurled thumbscrew into drive arm bracket.

5. Depress plunger and insert locking pin in two small holes of band assembly, making certain the plunger is behind locking pin.

NOTE: Tighten screws, then back up a quarter turn and retighten.

6. Tighten screw securing drive band assembly to drive arm assembly.

NOTE: Do not tighten more than 28 in-oz torque.

7. Remove locking pin.

8. Loosen knurled thumbscrew securing replacement tool to drive arm bracket and remove tool.

9. Apply glyptal (or equivalent) to heads of three screws to prevent their working out.

10. Install pen (Para. 6.25).

NOTE: Penmotor need not be removed from unit.

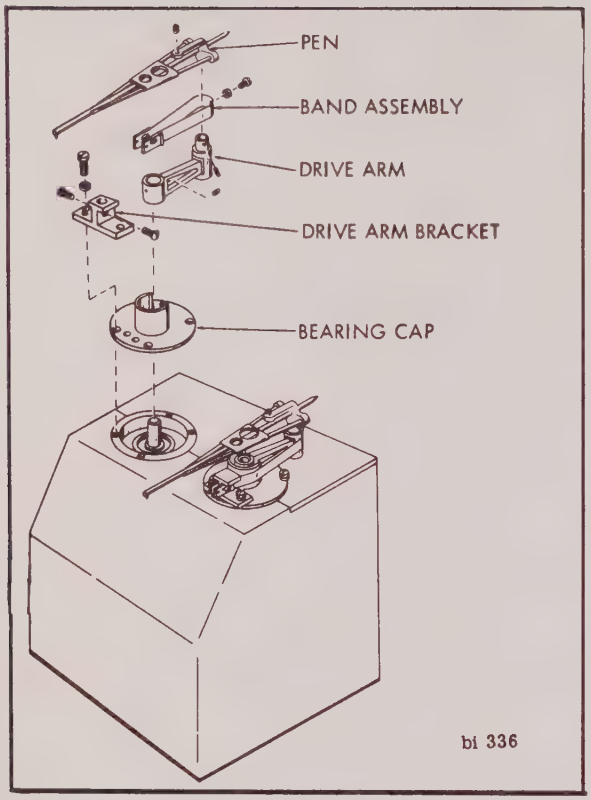

FIGURE 6-14 PENMOTOR PARTIAL EXPLODED VIEW

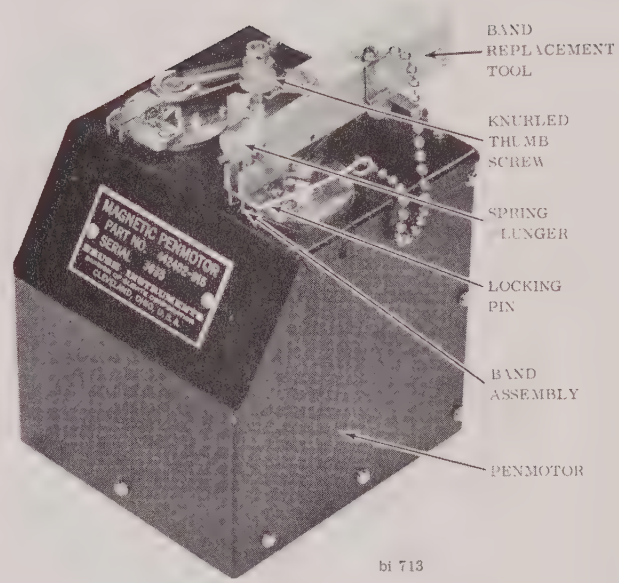

FIGURE 6-15 BAND REPLACEMENT TOOL 341409-915 INSTALLED ON PENMOTOR

6.28 40 MM PENMOTOR REPLACEMENT – VERTICAL OSCILLOGRAPH

a. Removal

CAUTION: PENMOTORS HAVE A STRONG MAGNETIC FIELD. USE CARE TO PROTECT OTHER PENMOTORS AND MAGNETIC MATERIALS (INCLUDING WRIST WATCHES) WHICH MAY BE ATTRACTED TO IT DURING HANDLING.

1. Turn off instrument.
2. Loosen four captive thumbscrews securing oscillograph in unit and pull oscillograph out as far as possible.
3. Release bezel and pull paper drawer out as far as possible.
4. Raise oscillograph control panel.
5. Slide individual ink valve to OFF position.
6. Remove ink tubing from manifold.
7. Remove pens (Para. 6.25).
8. Remove event markers (Para. 6.26 and 6.31 or 6.35).
9. Remove two screws and lockwashers from each side of oscillograph and lift out event marker mounting bar.
10. Disconnect penmotor harness connector P-741 from rear of penmotor.
11. Support penmotor and remove four socket-head cap screws and flat washers (Fig. 6-16).

NOTE: There are spring tension and flat washers located between penmotor and mounting bar. Remove screws carefully to prevent loosing these washers.

12. Gently remove penmotor from front of oscillagraph.

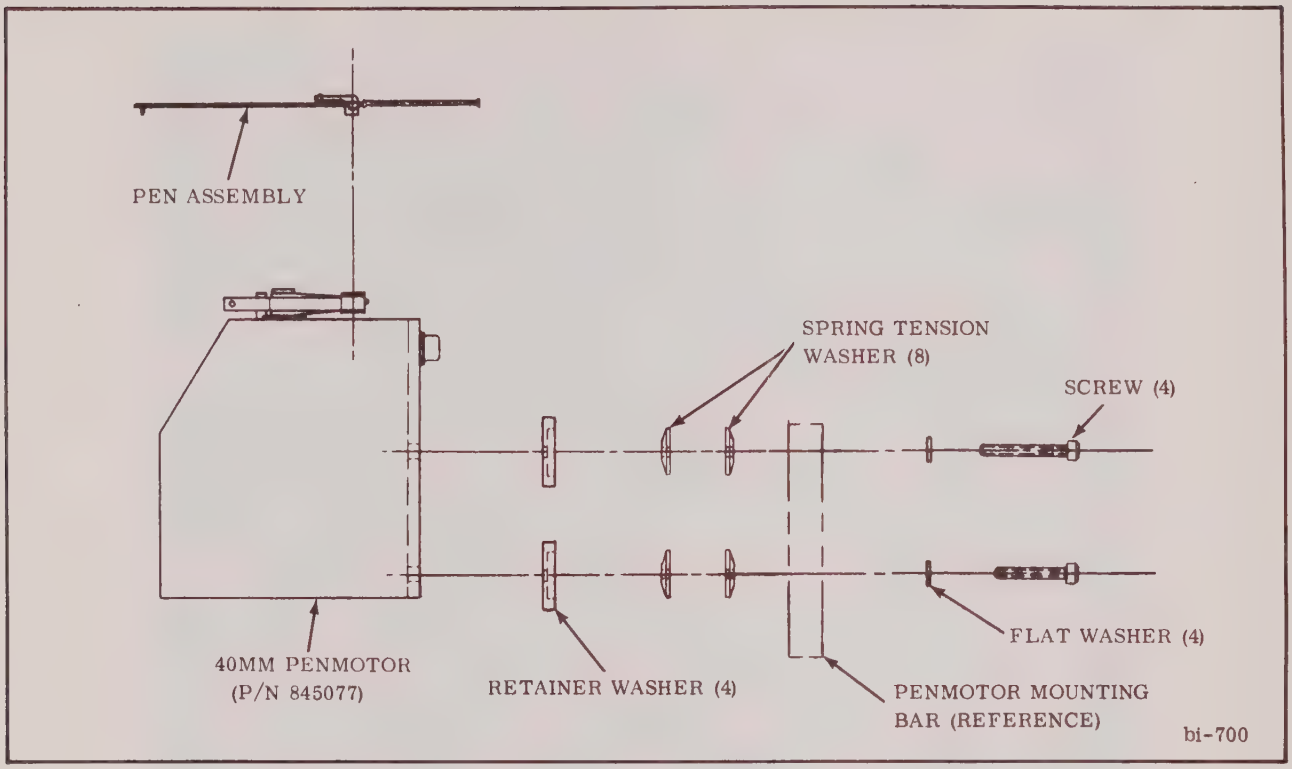

FIGURE 6-16 40MM PENMOTOR REPLACEMENT

b. Installation

1. Install four screws and flat washers down thru penmotor mounting bar.
2. On penmotor side of mounting bar place two spring-tension washers on each screw and place a retainer washer on each screw.
3. Position penmotor under mounting bar, engage screws, and tighten until they support penmotor weight.
4. Tighten all screws equally to bring penmotor parallel to mounting bar.

NOTE: Torque mounting screws to 55 to 60 inch-pounds.

5. Connect P-741 connector to rear of penmotor.
6. Position event marker mounting bar and attach with two screws and lock washers at each side of oscillograph.
7. Install event markers (Para. 6.31 or 6.35).
8. Install pens (Para. 6.26).
9. Observe time location of all analog pens. Equalize the time position of the two 40mm pens by loosening two screws (maximum of ½ turn) on side to be advanced.

NOTE: The four mounting screws are also used as adjustment screws. Loosening screws will allow that side of penmotor to move forward or backward as much as 0.015 inch.

10. Loosen all four screws equally to align both pens with the final time location of all pens.
11. Tighten screws.

NOTE: After loosening above screws, apply a minimum tightening torque of 18 inch-pounds to each screw.

12. Slide individual ink valve to ON position.
13. Slide oscillograph back into unit and tighten four captive thumbscrews.

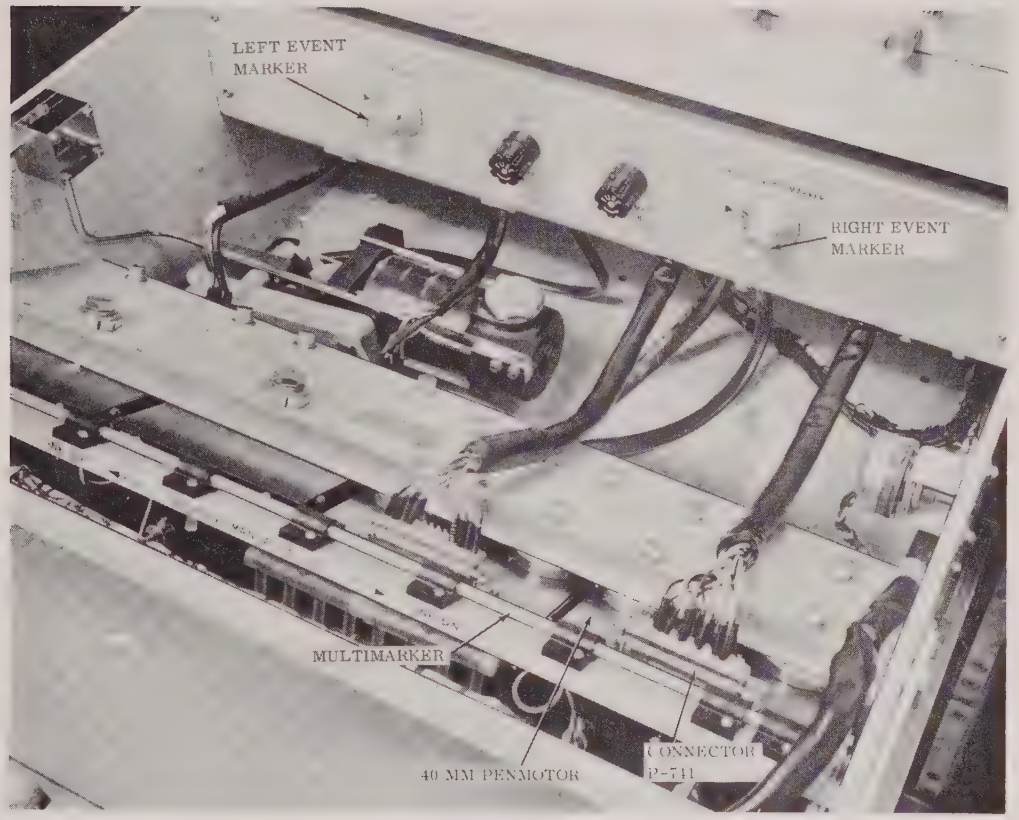

FIGURE 6-17 ANALOG AND MULTIMARKER PENMOTOR REPLACEMENT
VERTICAL OSCILLOGRAPH

6.29 80 MM PENMOTOR REPLACEMENT — VERTICAL OSCILLOGRAPH

a. Removal

1. Follow steps 1 thru 9 in Paragraph 6.28.

2. Disconnect connector from penmotor to be removed.

NOTE: Two 80mm penmotors can be connected to one drive amplifier. The connector for the left penmotors is P-781 and connector P-782 is for the right penmotor.

3. Support penmotor and remove three screws, two falt washers, three lcokwashers, and adjustment bushing (Fig. 6-18).

NOTE: The two flat washers are located between penmotor and mounting bar. Remove screws carefully to prevent losing flat washers.

4. Gently remove penmotor from front of oscillograph.

b. Installation

1. Install two screws and lockwashers thru penmotor mounting bar.

2. On penmotor side of mounting bar place flat washer over threads of both screws.

3. Hold penmotor in place and engage screws and tighten.

NOTE: Pen pressure will vary at extremes of pen swing if base is not parallel to pen bar.

4. Install adjustment bushing and center screw with lockwasher, allow a gap of 0.015 to

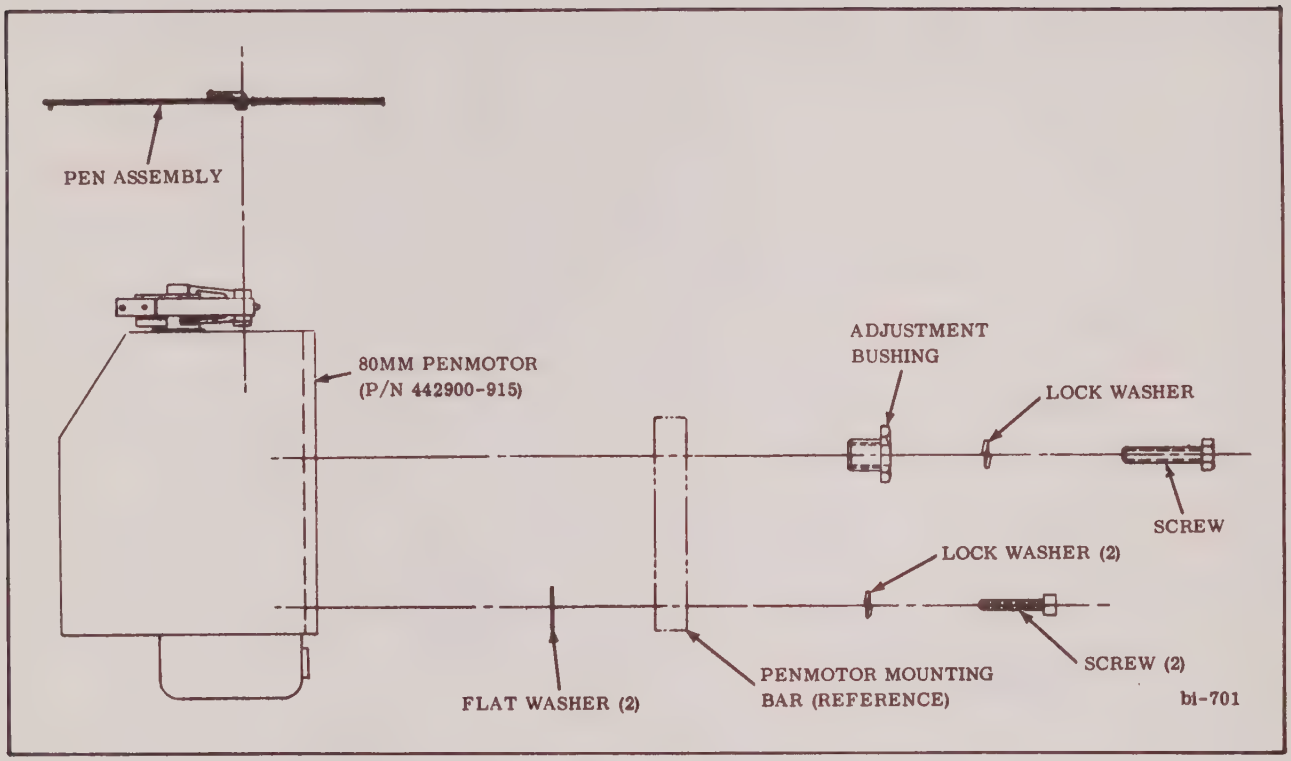

FIGURE 6-18 80MM PENMOTOR REPLACEMENT

0.020-inch between penmotor and mounting bar.

NOTE: This is not a final setting.

5. Install event marker mounting bar.
6. Install analog pen.
7. Check alignment of pen tip to other pens. If pen requires alignment, turn adjustment bushing in or out until correct alignment is obtained.
8. Tighten adjustment bushing screw. Do not over tighten.
9. Connect connectors P-781 or P-782 to penmotor.
10. Slide individual ink valve to ON position.
11. Lower oscillograph control panel.
12. Push in paper drawer and lock bezel.
13. Slide oscillograph into unit and tighten four captive thumb screws.

6.30 8–CHANNEL MULTIMARKER PENMOTOR REPLACEMENT – VERTICAL OSCILLOGRAPH

a. Removal

1. Follow steps 1 thru 5 in Paragraph 6.28.
2. Remove sub-manifolds from multimarker pens.
3. Loosen two screws at each pen and slide pens from penmotor.
4. Remove event marker mounting bar.
5. Disconnect penmotor harness connector P-788 from rear of penmotor.
6. Support penmotor and remove four screws, lockwashers and flat washers and retainer washers (Fig. 6-19).

NOTE: The four retainer washers located between penmotor and mounting bar are used as spacers

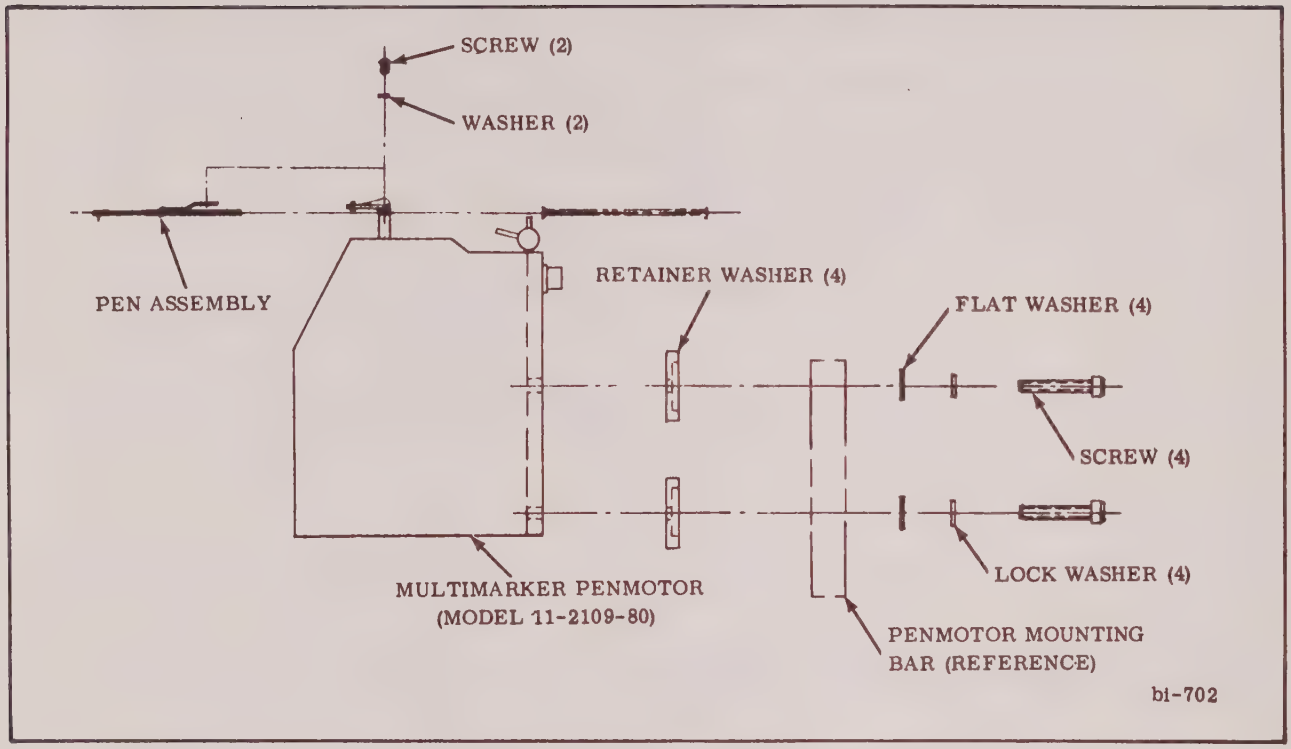

FIGURE 6-19 8–CHANNEL MULTIMARKER PENMOTOR REPLACEMENT

only. Remove screws carefully to prevent losing them.

b. Installation

1. Install four screws, lockwashers, and flat washers thru penmotor mounting bar.
2. On penmotor side of oscillogrpah place a retainer washer over threads of screws.
3. Hold penmotor in place and engage screws and tighten until they support penmotor weight.
4. Tighten all screws equally to bring penmotor parallel to mounting bar.
5. Connect penmotor harness connector P-788 to rear of penmotor.
6. Install pens and tighten two screws securing each pen.
7. Check alignment of pens to time line and channel center and adjust if necessary.

NOTE: Pens are adjusted by loosening two mounting screws and moving pen to correct alignment.

8. Install sub-manifolds between pens and main manifold avoiding excess tension which might restrict pen motion.

CAUTION: DO NOT USE SHARP INSTRUMENTS WHEN INSTALLING TUBING.

9. Slide individual ink valves to ON position.
10. Lower oscillograph control panel.
11. Push in paper drawer and lock bezel.
12. Slide oscillograph into unit and tighten four captive thumb screws.

6.31 EVENT MARKER REPLACEMENT – VERTICAL OSCILLOGRAPH

a. Removal (Fig. 6-20)

1. Follow steps 1 thru 6 in Paragraph 6.28.
2. Remove event marker pens (Para. 6.26).

3. Disconnect four pins of each event marker (if removing both event markers) from connectors located on support bar.

4. Remove event marker retaining screw from underside of mounting bar and remove event marker.

b. Installation (Fig. 6-20)

1. Install event marker on event marker mounting bar and secure with retaining screw.

2. Connect four pins of each event marker to connectors located on support bar as follows:

PIN	TERMINAL
Red	A
Yellow	B
Green	C
White	D

3. Install event marker pens (Para. 6.26).

4. Lower oscillograph control panel.

5. Push in paper drawer and lock bezel.

6. Slide oscillograph into unit and tighten four captive thumb screws.

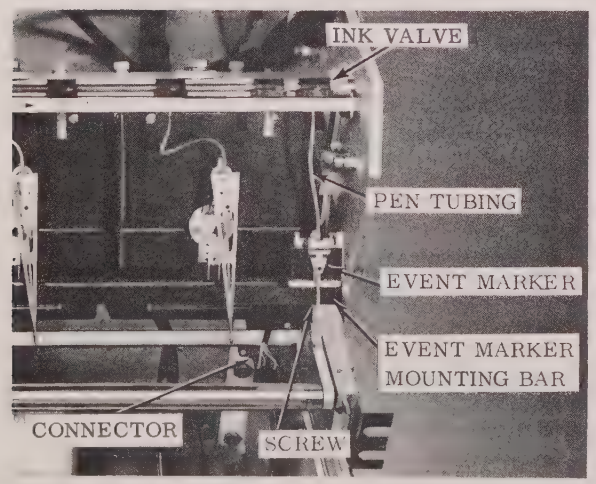

FIGURE 6-20 EVENT MARKER REPLACEMENT

6.32 40MM PENMOTOR REPLACEMENT – HORIZONTAL OSCILLOGRAPH

a. Removal (Fig. 6-16)

CAUTION: PENMOTORS HAVE A STRONG MAGNETIC FIELD. USE CARE TO PROTECT OTHER PENMOTORS AND MAGNETIC MATERAILS (INCLUDING WRIST WATCHES), WHICH MAY BE ATTRACTED TO IT DURING HANDLING.

1. Turn off instrument.

2. Press release levers and pull oscillograph out as far as possible.

3. Slide individual ink valves to OFF position.

4. Lower right side panel and release pressure roller.

CAUTION: BE SURE TO CLOSE SIDE PANEL BEFORE SLIDING OSCILLOGRPAH BACK INTO UNIT.

5. Pull paper out from between drive and pressure rollers.

6. Lift note pad end of writing table far enough to release trapped ink from pen tips.

7. Slide paper forward along table until ink flow stops. Tear off chart paper and discard.

8. Remove chart paper.

9. Remove writing table.

10. Remove ink tubing from manifold.

11. Remove pens (Para. 6.25).

12. Remove event marker mounting bar.

13. Place a piece of wood 3/8 by 3 by 14 inches under the penmotors.

14. Slide oscillograph back into unit.

15. Remove back cover from oscillograph.

16. Disconnect P-741 connector from rear of penmotor.

17. Support penmotor and remove four socket head cap screws and flat washers.

NOTE: There are spring tension and retainer washers located between penmotor and mounting bar. Remove screws carefully to prevent losing these washers.

18. Gently lower penmotor onto wood block.

19. Pull oscillogrpah out as far as possible.

20. Gently remove penmotor from oscillograph.

21. Remove wood block.

b. Installation (Fig. 6-16)

1. Slide oscillograph back into unit.

2. Install four screws and flat washers thru mounting bar at rear of oscillograph.

3. Pull oscillograph out as far as possible.

4. On penmotor side of mounting bar place two spring tensions washers (facing each other) and retainer washer (counterbore facing bar) over threads of screws.

5. Hold penmotor in place and engage screws and tighten until they support penmotor weight.

6. Slide oscillograph back into unit.

7. Tighten all screws equally to bring penmotor parallel to mounting bar. (Bottom of penmotor should also be parallel to pen bar.)

NOTE: Torque mounting screws to 55 to 60 inch-pounds.

8. Connect P-741 connector to rear of penmotor.

9. Pull oscillogrpah out as far as possible.

10. Install event marker mounting bar.

11. Install pens (Para. 6.25 & 6.26), and connect ink tubing to manifold.

12. Observe time location of all analog pens. Equalize the time position of the two 40mm pens by loosening two screws (maximum of ½ turn) on side to be advanced.

NOTE: The four mounting screws are also used as adjustment screws. Loosening screws will allow that side of penmotor to move forward or backward as much as 0.015 inch.

13. Loosen all four screws equally to align pens with the final time location of all pens.

14. Tighten screws.

NOTE: After loosening above screws, apply a minimum tightening torque of 18 inch-pounds to each screw.

15. Replace back cover on oscillograph.

16. Install writing table.

17. Install chart paper.

18. Slide individual ink valves to ON position.

6.33 80 MM PENMOTOR REPLACEMENT – HORIZONTAL OSCILLOGRAPH

a. Removal (Fig. 6-18)

1. Follow steps 1 thru 15 in Paragraph 6.32a.

2. Disconnect connector from penmotor to be removed.

NOTE: Two 80mm penmotors can be connected to one drive amplifier. The connector for the left penmotor is P-781 and connector P-782 is for the right penmotor.

3. Support penmotor and remove three screws, two flat washers, three lcok washers, and adjustment bushing.

NOTE: The two flat washers are located between penmotor and mounting bar. Remove screws carefully to prevent losing flat washers.

4. Gently lower penmotor onto wood block.

5. Pull oscillogrpah out as far as possible.

6. Gently remove penmotor from oscillograph.

7. Remove wood block.

b. **Installation (Fig. 6-18)**

1. Install two screws and lock washers thru mounting bar at rear of oscillograph.
2. On penmotor side of mounting bar place flat washer over threads of both screws.
3. Hold penmotor in place and engage screws and tighten.

NOTE: Pen pressure will vary at extremes of pen swing if base is not parallel to pen bar.

4. Install adjustment bushing and center screw with lockwasher, allowing a gap of 0.015 to 0.020-inch between penmotor and mounting bar.

NOTE: This is not a final setting.

5. Pull oscillograph out as far as possible.
6. Install event marker mounting bar.
7. Install pen (Para. 5.4.5), and connect ink tubing to manifold.
8. Check alignment of pen tip to other pens. If pen requires alignment turn adjustment bushing in or out until correct alignment is obtained.
9. Tighten screw thru adjustment bushing while holding pen position by adjustment of bushing. Do not over tighten.
10. Connect connectors P-781 or P-782 to penmotor.
11. Replace back cover on oscillograph.
12. Install writing table.
13. Install chart paper.
14. Slide individual ink valve to ON postion.

6.34 8-CHANNEL MULTIMARKER PENMOTOR REPLACEMENT– HORIZONTAL OSCILLOGRAPH

a. **Removal (Fig. 6-19)**

1. Follow steps 1 thru 9 in Paragraph 6.32a.
2. Place a piece of wood 3/8 by 3 by 14 inches under the penmotors.
3. Remove sub-manifolds from multimarker pens.
4. Loosen two screws at each pen and slide pens from penmotor.
5. Remove event marker mounting bar (Para. 6.32a).
6. Slide oscillograph back into unit.
7. Remove back cover from oscillograph.
8. Disconnect P-788 connector from rear of penmotor.
9. Support penmotor and remove four screws, lockwashers, flat washers, and retainer washers.
10. Gently lower penmotor onto wood block.

NOTE: The four retainer washers located between penmotor and mounting bar are used as spacers only. Remove screws carefully to prevent losing them.

11. Pull oscillograph out as far as possible.
12. Gently remove penmotor from oscillograph.
13. Remove wood block.

b. **Installation (Fig. 6-19)**

1. Install lower screws, lcokwashers, and flat washers thru mounting bar at rear of oscillograph.
2. On penmotor side of oscillograph place a retainer washer over threads of screws. (Counterbore toward bar).
3. Hold penmotor in place and engage screws and tighten until they support penmotor weight.
4. Slide oscillograph back into unit.
5. Tighten all screws equally to bring penmotor parallel to mounting bar.

6. Connect connector P-788 to rear of penmotor.

7. Install back cover on oscillograph.

8. Pull oscillograph out as far as possible.

9. Install pens and tighten two screws securing each pen.

10. Check alignment of pens to time line and channel center and adjust if necessary.

NOTE: Pens are adjusted by loosening two mounting screws and moving pen to correct alignment.

11. Install sub-manifolds between pens and main manifold avoiding excess tension which might restrict pen motion.

CAUTION: DO NOT USE SHARP INSTRUMENTS WHEN INSTALLING TUBING.

12. Install writing table.

13. Install chart paper.

14. Slide individual ink valves to ON position.

6.35 EVENT MARKER REPLACEMENT— HORIZONTAL OSCILLOGRAPH

a. Removal

1. Follow steps 1 thru 9 in Paragraph 6.32a.

2. Remove pen tubing from manifold.

3. Remove event marker pens (Para. 6-26).

4. Disconnect four pins of each event marker (if removing both event markers) from connectors located on penmotor support bar (Fig. 6-21).

5. Remove event marker retaining screw from mounting bar and remove event marker.

NOTE: To remove event marker mounting bar, remove two screws and lockwashers from each side of oscillograph and lift out mounting bar.

b. Installation

1. Install event marker on event marker mounting bar and secure with event marker retaining screw.

2. Connect four pins of each event marker to connectors located on penmotor support bar as follows:

PIN	TERMINAL
Red	A
Yellow	B
Green	C
White	D

3. Install event marker pens (Para. 6.26).

4. Install writing table.

5. Install chart paper.

6. Slide individual ink valve to ON position.

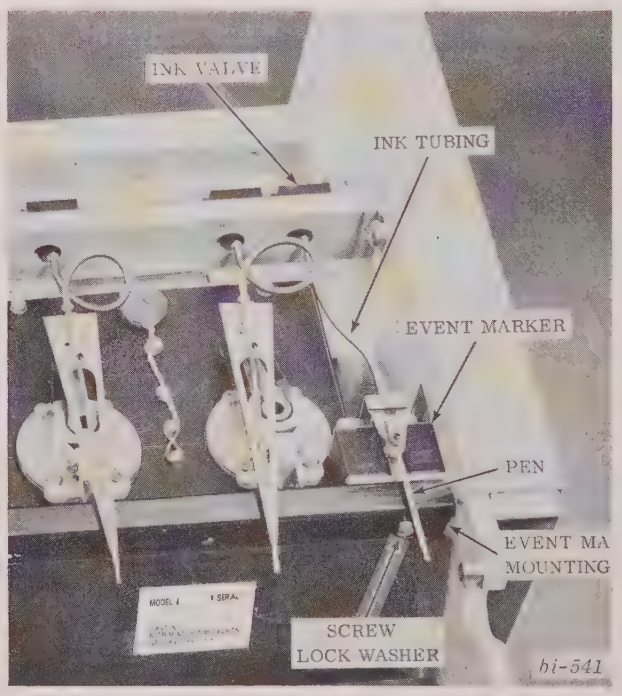

FIGURE 6-21 EVENT MARKER REPLACEMENT

6.36 INKING SYSTEM REPLACEMENT — VERTICAL OSICLLOGRAPH

a. Preliminary Procedures

Perform the following steps before beginning removal.

1. Turn main power switch to OFF position.

2. Press oscillograph STOP button.

3. Loosen four captive screws securing oscillograph in unit and pull oscillogrpah out as far as possible.

4. Raise oscillograph control panel.

b. Removal and Disassembly of Manifold and Tube Assemblies

NOTE: Refer to Figure 6-22.

1. Remove two screws and lockwashers securing adapter to ink reservoir.

2. Remove preformed packing from adapter.

3. Remove screw, flat washer and lockwasher from left side plate securing check valve and mounting block to side plate.

4. Remove shoulder bolt attaching manifold arm to actuating arm.

5. Remove two screws from outside of right side plate and one screw from left side and remove manifold and tube assembly and manifold support.

6. Loosen screw and remove manifold arm from manifold.

7. Remove two screws and lockwashers and separate tube assembly and manifold assembly.

8. Remove ten valve nipples from manifold assembly.

9. Remove two screws and lcokwashers and remove retainer and preformed packing from tube assembly.

10. Remove two screws and lcokwashers from top of check valve assembly and remove time delay valve from mounting block.

NOTE: There are two preformed packings located between time delay valve body and mounting block.

11. Remove remaining two screws and lockwashers from time delay valve and disassemble valve.

CAUTION: DO NOT ATTEMPT FURTHER DISASSEMBLY OF ANY COMPONENT. IF DEFECTIVE, REPLACE WITH NEW COMPONENT. EXPLODED VIEW SHOWN FOR CLARITY ONLY.

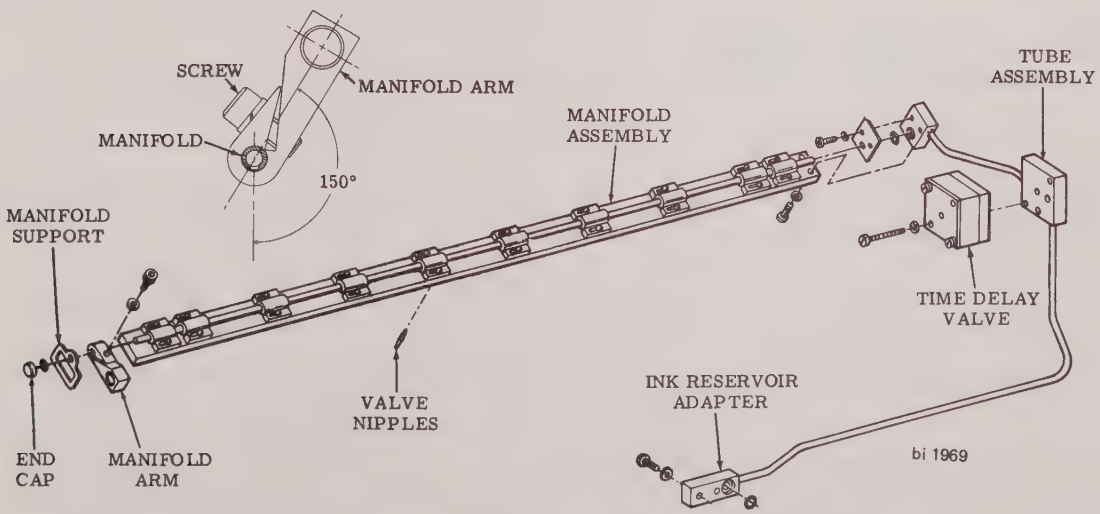

FIGURE 6-22 INK MANIFOLD ASSEMBLY

c. Assembly and Installation of Manifold and Tube Assembly

1. Slide manifold arm onto manifold and locate in position as shown in Figure 6-22. Apply locktite (grade E) or equivalent to threads of screw and tighten screw to 17 in-lb± 1 in-lb.

CAUTION: WHEN TIGHTENING SCREW, USE CARE NOT TO DISTORT MANIFOLD

2. Assemble time delay valve as shown in Figure 6-22.

CAUTION: DURING ASSEMBLY CHECK TO BE SURE CHECK VALVE 244655 IS INSTALLED ON VALVE STEM WITH FLAT SIDE (NON-COUNTERSUNK) AGAINST SPRING, TO PREVENT POSSIBLE BINDING.

3. Insert two preformed packings in openings in back of valve assembly and attache valve assembly to mounting block with two screws and lockwashers.

4. Install preformed packing in manifold and block of tube assembly, align retainer over packing, and secure with two screws and lockwashers.

5. Slide manifold assembly into manifold end block and secure with two screws and lcok washers.

6. Install ten valve nipples into manifold assembly so that nipples extend 0.250-inch from manifold.

7. Install preformed packing, manifold support, and manifold end cap on manifold.

8. Blow out entire assembly with clean, dry air to remove all foreign particles.

9. Place manifold and tube assembly in oscillograph and secure with two screws on right side and one screw on left side.

10. Install shoulder bolt attaching manifold arm to actuating arm.

11. Secure check valve nad mounting block to left side plate with screw, flat washer, and lcokwasher.

12. Insert preformed packing in adpater and attach adapter to ink chamber with two screws and lockwashers.9

d. Removal and Disassembly of Ink Supply Assembly

NOTE: Refer to Figure 6-23 and 8-13.

1. Disconnect harnesses from first two penmotors and move harnesses free of working area.

2. Unsodler two leads to pump motor.

3. Remove two screws and lockwashers attaching tube assembly adapter to ink chamber.

NOTE: Cover opening in tube assembly and ink chamber with tape to prevent ink leadage.

4. Remove two screws attaching ink supply assembly and mounting bracket to oscillograph.

NOTE: Hold nuts on underside of ink supply assembly to avoid dropping and/or losing them.

5. Carefully lift ink supply assembly from oscillograph.

6. Purge ink supply assembly of all ink (Para. 6.38).

7. Remove four screws and lockwashers attaching bracket to ink supply assembly.

8. Remove set screw securing pointer to piston.

9. Remove four nuts, four lockwashers and two flat washers and remove pointer guide and pointer.

10. Separate ink cylinder assembly from plate.

11. Remove four threaded studs from ink chamber.

12. Remove cap screw, preformed packing, and spring from ink chamber.

13. Slide piston assembly from ink cylinder and remove screw, piston cap, diaphragm, set screw and rack gear from piston.

14. Remove roll pin from spur gear.

15. Remove four screws and lockwashers and remove plate assembly and spur gear from gear head.

16. Remove two screws securing mounting plate to plate and remove mounting plate.

17. Remove straight pin along with retaining ring and guide from plate.

18. Remove retaining ring and guide from straight pin.

19. Remove roller bearing from plate.

e. Assembly and Installation of Ink Supply Assembly

NOTE: Refer to Figure 6-23 and 8-13 for assembly of ink supply assembly.

1. Install idler bearing in plate.

2. Assemble retaining ring and guide on straight pin and install pin in plate.

3. Attach mounting plate to plate with two screws removed in d.step 16.

4. Install plate assembly with spur gear onto gear head shaft and attach plate assembly to gear head with four screws and lock washers removed in d.step 15.

5. Install roll pin in spur gear.

6. Slide rack gear (with gear teeth away from set screw hole) into piston and secure with set screw removed in d.step 13.

7. Attach diaphragm to piston with piston cap and screw, and slide piston assembly into ink cylinder.

NOTE: Check to be sure pointer set screw hole in piston is aligned with access hole in ink cylinder.

8. Install spring preformed packing and cap screw in ink chamber.

9. Install four threaded studs in ink chamber and attach chamber assembly and cylinder assembly to plate assembly with two lockwashers and nuts.

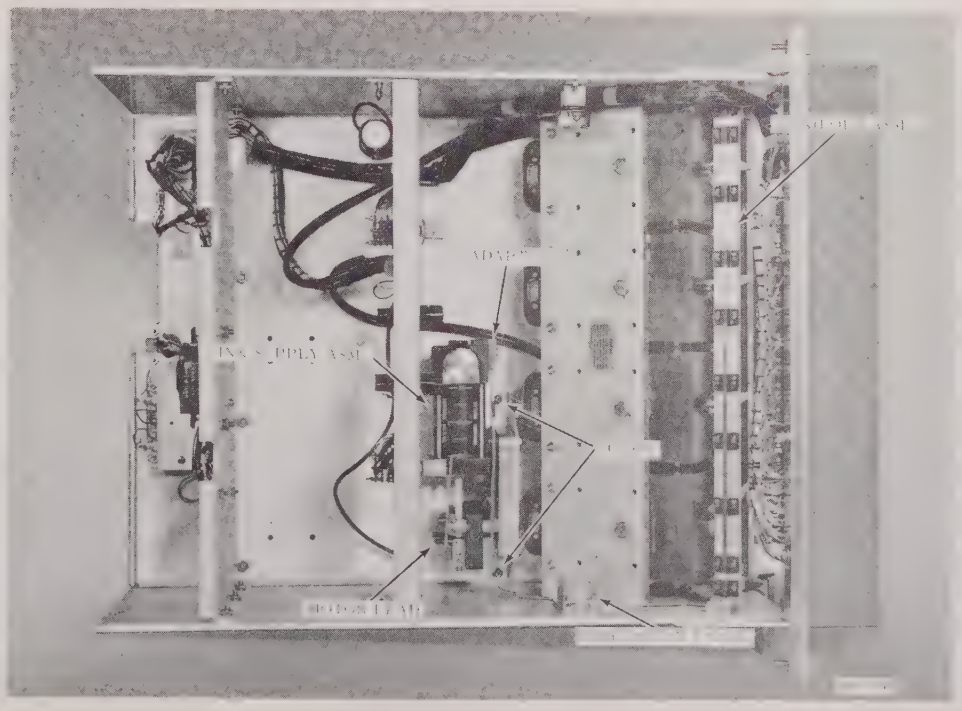

FIGURE 6-23 INKING SYSTEM – VERTICAL OSCILLOGRAPH

10. Assemble pointer and pointer guide and insert pointer into piston and secure with set screw removed in d.step 8.

11. Attach pointer guide to plate assembly with two nuts, lockwashers and flat washers removed in d.step 9.

12. Attach ink supply asssmbly to bracket with four screws and lockwashers removed in d. step 7.

13. Install ink supply assembly with bracket in oscillograph and secure with two screws, lock washers and nuts removed in d.step 4.

14. Remove tape from ink chamber and tube assembly and attach tube assembly to ink chamber with two screws and lockwashers removed in d.step 3.

15. Solder two leads to pump motor and connect harnesses to first two penmotors.

CAUTION: ATTACH STRIPED LEAD TO UPPER TERMINAL OF PUMP MOTOR.

16. Bleed and fill ink supply assembly (Refer to Para. 6-37).

6.37 INK SYSTEM REPLACEMENT – HORIZONTAL OSCILLOGRAPH

1. Turn main power switch to OFF position.

2. Press oscillograph STOP button.

3. Remove chart paper (Refer to operator's manual.

4. Slide oscillograph into cabinet and remove oscillograph rear cover.

5. Remove oscillograph left and right side cover assemblies.

NOTE: It will be necessary to slide oscillograph from cabinet to remove all screws.

For removal, disassembly, assembly, installation of inking system refer to Paragraph 6.36 steps b thru e and Figure 6-24 and 8-8.

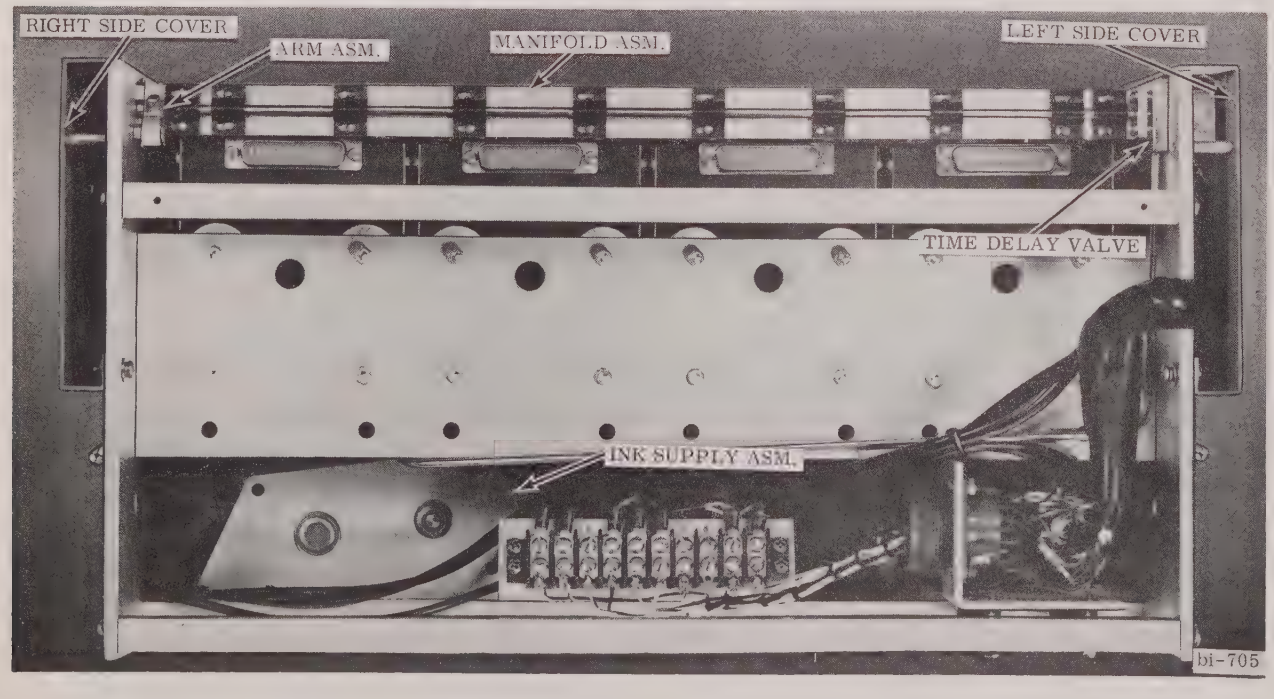

FIGURE 6-24 INKING SYSTEM – HORIZONTAL OSCILLOGRAPH

6.38 BLEEDING INKING SYSTEM

a. General

The system must be free of air to eliminate sponginess which could prevent quick pressure release and interfere with the intended operation of time delay valve. A vent screw has been provided at the high point in the system which is at top of time delay valve.

b. Time Delay Valve Operation

The time delay valve opens when pressure is applied at master cylinder and closes a few minutes after pressure is removed. This action permits ink pressure to drop fully before the valve seals the system. Sealing prevents ink in lines from draining back into master cylinder and drawing air through pen tips into inking system.

c. Procedure

1. Slide manifold valves to OFF position.
2. Disconnect ink tubes from manifold valves.
3. Fill ink cylinder (Refer to operator's manual).
4. Slide manifold valve at end farthest from ink cylinder to ON position, leaving other valves in OFF position.
5. Place a suitable container under open ink valve to collect ink when pressure is applied.
6. Apply power to ink pump motor.
7. Allow ink to fill manifold and escape at open valve until only ½-oz remains in cylinder, then shut off open valve.

NOTE: It may be necessary to rotate manifold tube for ink to flow.

8. Open remaining valves, one at a time, starting at end farthest from ink cylinder. Allow a few drops of ink to be purged from each valve into a suitable container to remove air.
9. Loosen vent screw (slowly) at top of time delay valve and bleed any air which may have collected. Wipe off ink which collects around vent screw and continue to bleed until air is completely dispelled. Tighten screw.
10. Note position of indicator on cylinder and shut off power to pump motor. Indicator should move backward less than 1/64-inch, if all air is out of system.
11. Add ink to system until indicator is at STOP-FILLING line on cylinder. Tighten filler cap before energizing pump motor.

6.39 REMOVAL OF CHART DRIVE ASSEMBLY

a. Vertical Oscillograph

1. Turn oscillograph power OFF.
2. Loosen four captive thumb screws and pull oscillograph out as far as possible.
3. Release bezel and pull paper drawer out to expose transmission shaft pulley (Fig. 6-25).

CAUTION: CHECK TO BE SURE RACK IS SECURED TO PREVENT TIPPING WHEN OSCILLOGRAPH IS EXTENDED.

4. Remove two set screws from pulley and slide pulley with drive belt from shaft.
5. Remove three screws, lockwashers, and flat washers attaching transmission to paper drawer left side.

NOTE: Three spacers between drawer and transmission will drop off.

6. Remove splash guard from between motor and transmission (Fig. 6-26)
7. Hold drive assembly mounting nuts on inside of paper drawer while removing two screws and flat washers from underside of paper drawer. Remove two nuts and lockwashers.
8. Disconnect leads 6 thru 14 on terminal board TB-703 on rear of oscillograph.
9. Remove complete drive assembly from paper drawer.
10. Refer to Figure 6-27 for disassembly and assembly to drive assembly.

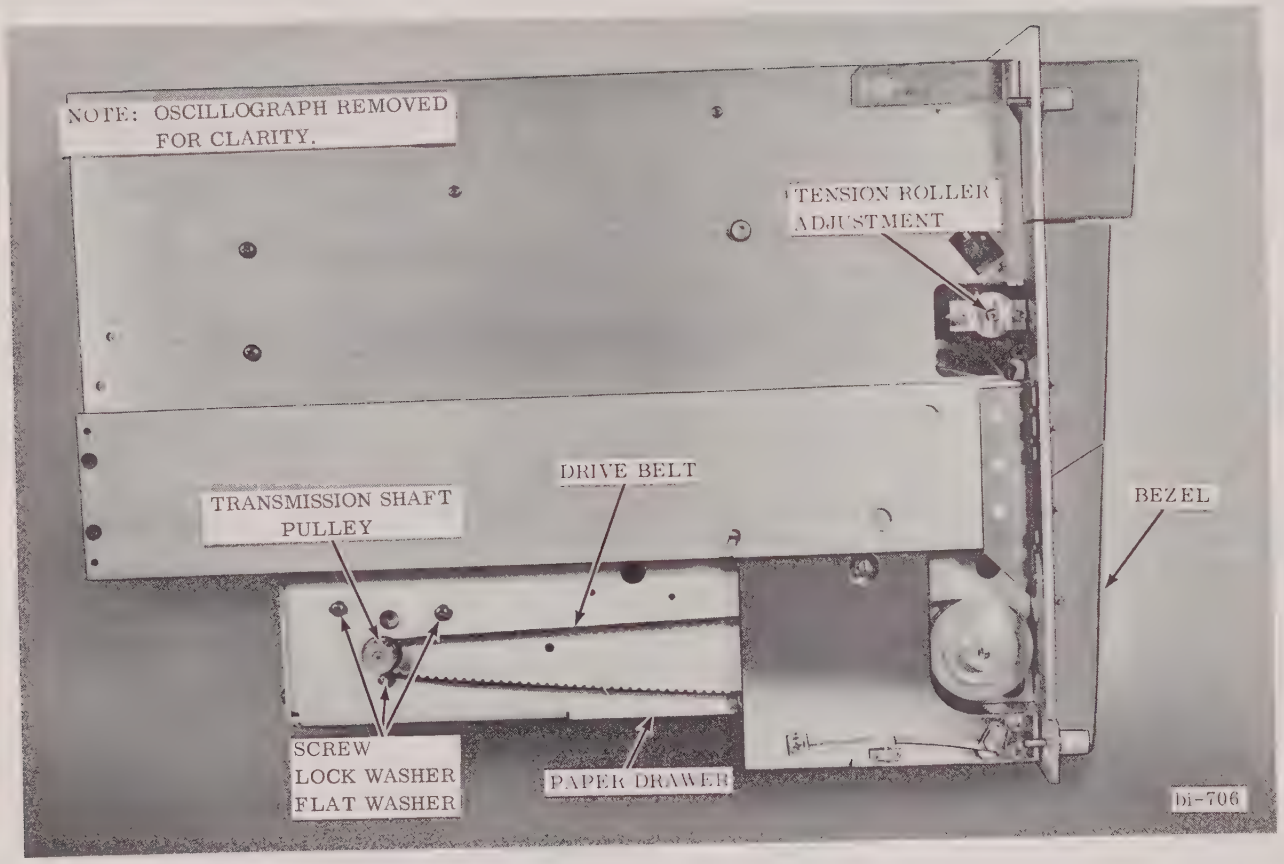

FIGURE 6-25 REMOVAL AND INSTALLATION OF CHART DRIVE ASSEMBLY (1 of 2)

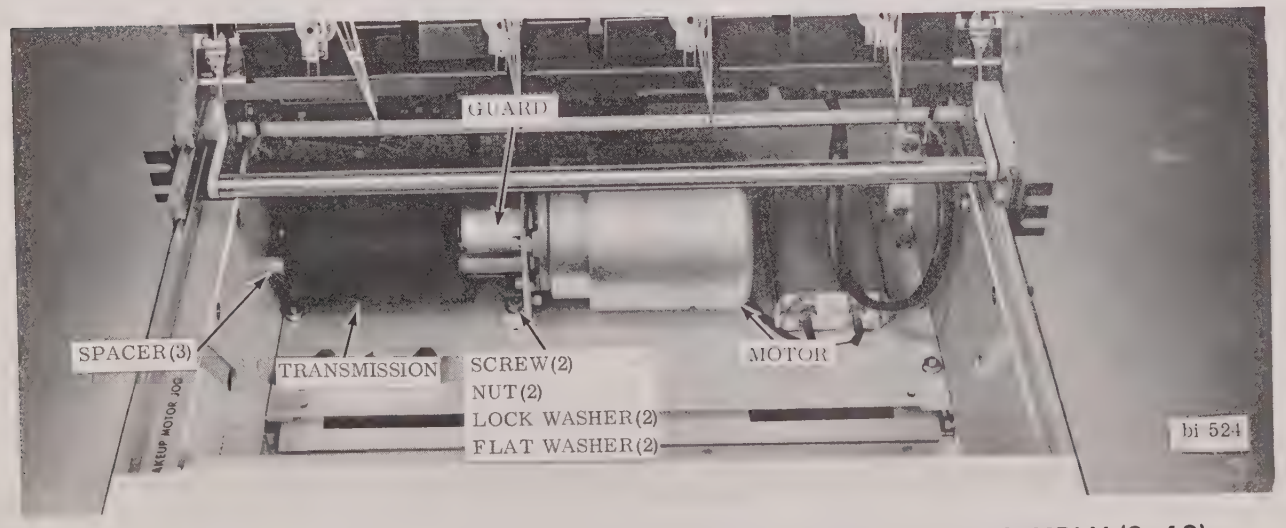

FIGURE 6-26 REMOVAL AND INSTALLATION OF CHART DRIVE ASSEMBLY (2 of 2)

b. Horizontal Oscillograph

1. Turn oscillograph power OFF.
2. Press release levers and pull oscillograph out as far as possible.
3. Open both side covers.
4. Release pressure roller lever on right side of oscillograph.
5. Remove writing table and chart paper.
6. Remove lower paper drag assembly from bottom of paper drawer.
7. Remove two flat-head screws and remove oscillograph control panel from chassis.

NOTE: Do not disconnect electrical leads from control panel.

8. Remove two screws and lockwashers and remove cable guard from left side plate.
9. Remove four screws and lockwashers (two sets each side) and remove upper paper chute from front of oscillograph.
10. Remove two flat-head screws from front and two pan-head screws and lockwashers (one set each side) and remove lower paper chute from oscillograph.
11. Tag for identification and remove transmission and motor lead terminals 6 thru 14 from terminal board TB-703.
12. Through holes in left side plate, remove three socket-head screws and lockwashers attaching transmission to transmission mounting plate.
13. Remove two socket-head screws and lockwashers attaching drive assembly connecting bar (Fig. 6-27) and carefully remove drive assembly from oscillograph.
14. Refer to Figure 6-27 for disassembly and assembly of drive assembly.

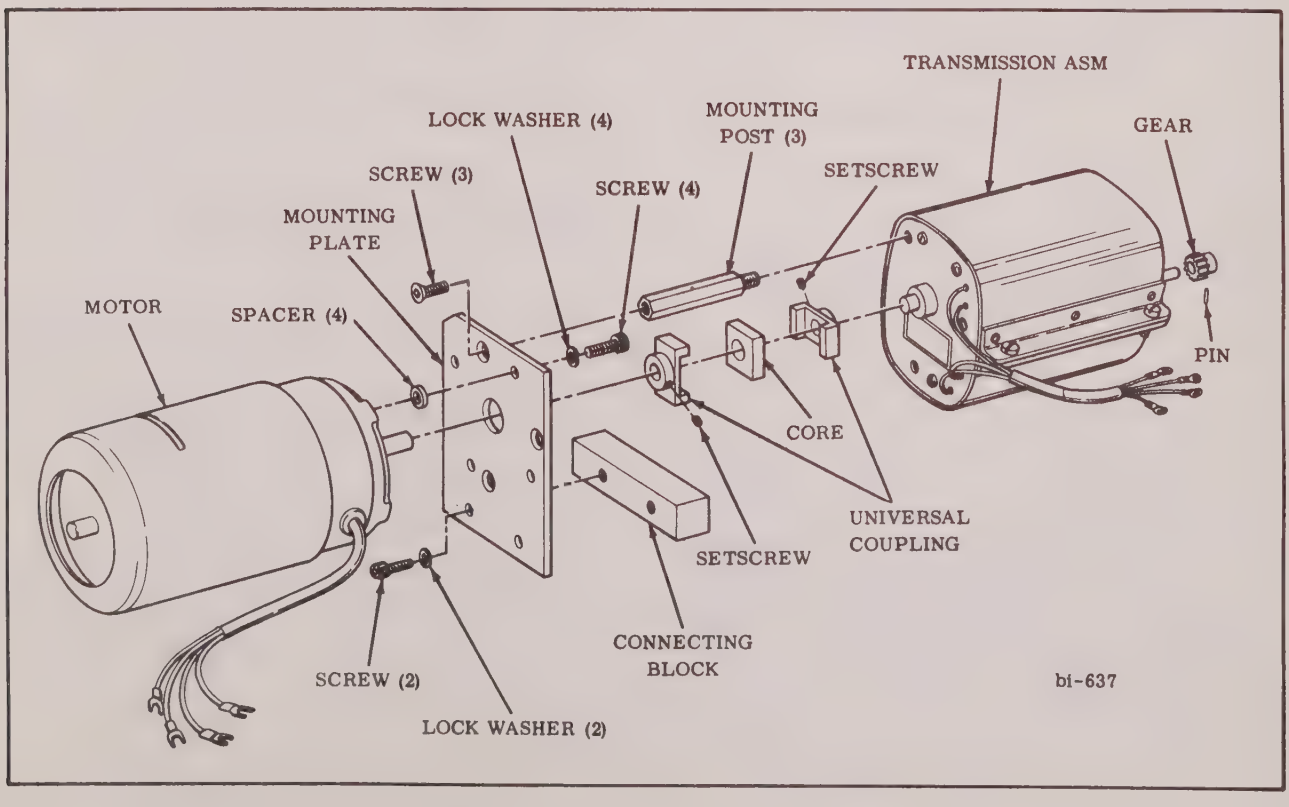

FIGURE 6-27 CHART DRIVE ASSEMBLY—EXPLODED VIEW

6.40 INSTALLATION OF CHART DRIVE ASSEMBLY

a. Vertical Oscillograph

1. Position drive assembly in paper drawer.
2. Install two screws and flat washers from underside of paper drawer thru mounting block on drive assembly.
3. While holding screws, insall, but do not tighten, two nuts and lockwashers on inside of paper drawer (Fig. 6.26)

NOTE: Rear mounting nut may be installed thru access hole in rear of paper drawer.

4. Install, but do not tighten, three screws, lock washers, flat washers, and spacers to attach transmission to paper drawer left side plate.
5. Fit timing belt over pulley and slide pulley onto transmission shaft (Fig. 6-25).
6. Tighten two set screws that secure pulley to transmission shaft.

CAUTION: Check to be sure belt is not rubbing against drawer or shroud.

7. Adjust belt tension by pushing drive assembly toward rear of drawer and tighten transmission mounting screws.

NOTE: Tension is correct when belt can be depressed 1/8-inch at transmission pulley.

8. Tighten two drive assembly mounting screws and nuts on bottom of paper drawer.
9. Slide splash guard under threaded spacers between motor and transmission (Fig. 6-25).
10. Attach transmission leads to terminal board TB-703 as follows:

TRANSMISSION LEAD	TERMINAL
Green	6
Blue	7
Violet	8
Grey	9
White	10

11. Attach motor leads to terminal board TB-703 as follows:

MOTOR LEAD	TERMINAL
White	11
Red	12
Yellow	13
Green	14

b. Horizontal Oscillograph

1. Carefully install drive assembly in oscillograph so not to damage transmission drive gears.
2. Install, but do not tighten, two socket-head screws attaching drive assembly connecting bar (Fig. 6-27) to oscillograph chassis.
3. Install, but do not tighten, three socket-head screws attaching transmission to transmission mounting plate.
4. Slowly tighten three socket-head screws while rotating drive roller. When drive roller rotates without binding, tighten screws.
5. Tighten two socket-head screws attaching drive assembly to chassis.
6. Attach transmission and motor leads to TB-703 as indicated in a steps 10 and 11.

6.41 CONVERTING SYSTEM TO 40MM, 80MM OR MULTIMARKER CHANNELS

a. General

Because of its unique modular construction, this unit may be easily changed from 40mm, 80mm, or multimarker systems to any combination of the above. This paragraph describes the procedure for changing the configuration of a channel. Refer to Figure 6-31 and the procedures covering installation of a particular amplifier and harness kit. (Model 11-2292-00 for 40mm penmotors, Model 11-2291-00 for 80mm penmotors, and Model 11-2298-00 for multimarker penmotors). Refer to the appropriate paragraph for removal and installation of penmotors.

b. Preliminary Steps

1. Disconnect system power input cable from power source.

2. Remove drive assembly cover plate from front of unit.

3. Remove the amplifier(s) for channel(s) being changed.

4. Remove two screws from dust cover at rear of drive frame.

5. Using the finger hole, lift dust cover upward to disengage it from four locating screws and remove dust cover.

6. Disconnect four plugs from connectors J-190A thru J-190D on relay chassis assembly at rear of drive frame (Fig. 6-28).

7. Remove two screws and lift out relay chassis assembly (Fig. 6-28) to gain access to amplifier harness connectors.

NOTE: It may be necessary to disconnect penmotor and oscillograph cables from side of unit to gain access to screw on dust cover and relay chassis assembly.

8. Disconnect all leads at terminals 1 thru 5 on appropriate terminal board (TB-181 thru TB-184) on rear of drive frame (Fig. 6-29).

NOTE: Multimarker leads are attached to terminals 5, 6, and 7.

9. Disconnect leads at terminals 1 thru 4 on appropriate terminal board (TB185 or TB-186) at rear of drive frame (Fig. 6-19).

10. Remove screw and disconnect cable clamp from hex spacer on appropriate channel (Fig. 6-29).

NOTE: Opposite end of harness is connected to penmotor.

c. Installation of Amplifier and Harness Kit (Model 11-2291-00 or Model 11-2292-00)

1. Turn hex spacer at rear of drive frame (refer to drawing 461599) and align index pin key with number on frame for amplifier selected.

NOTE: Numbering on frame relates to amplifier used.

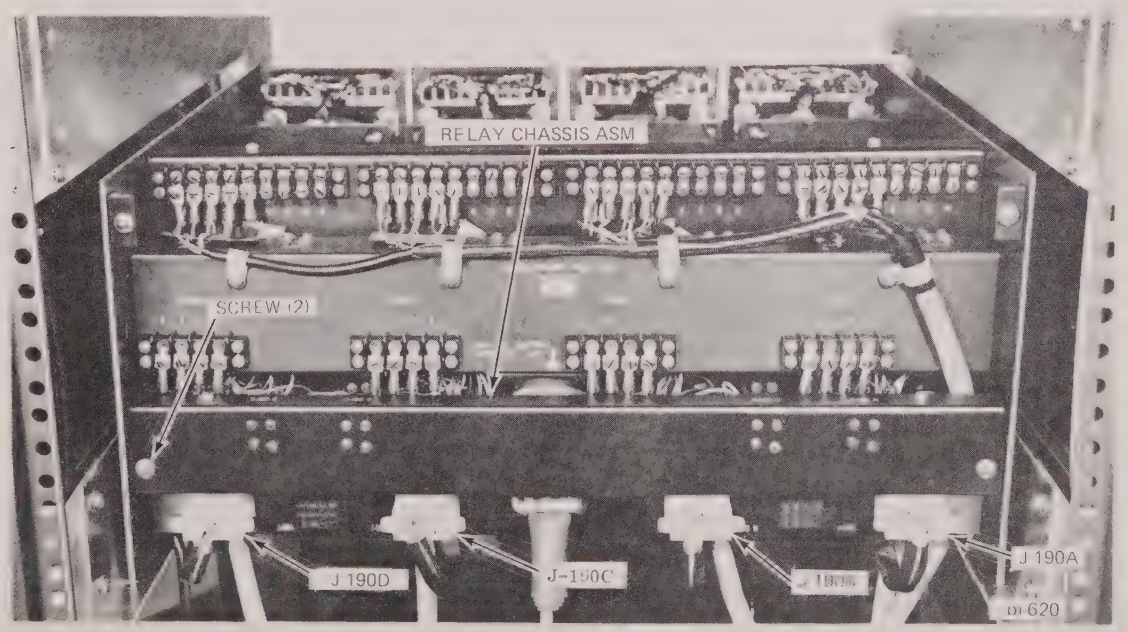

FIGURE 6-28 RELAY CHASSIS ASSEMBLY

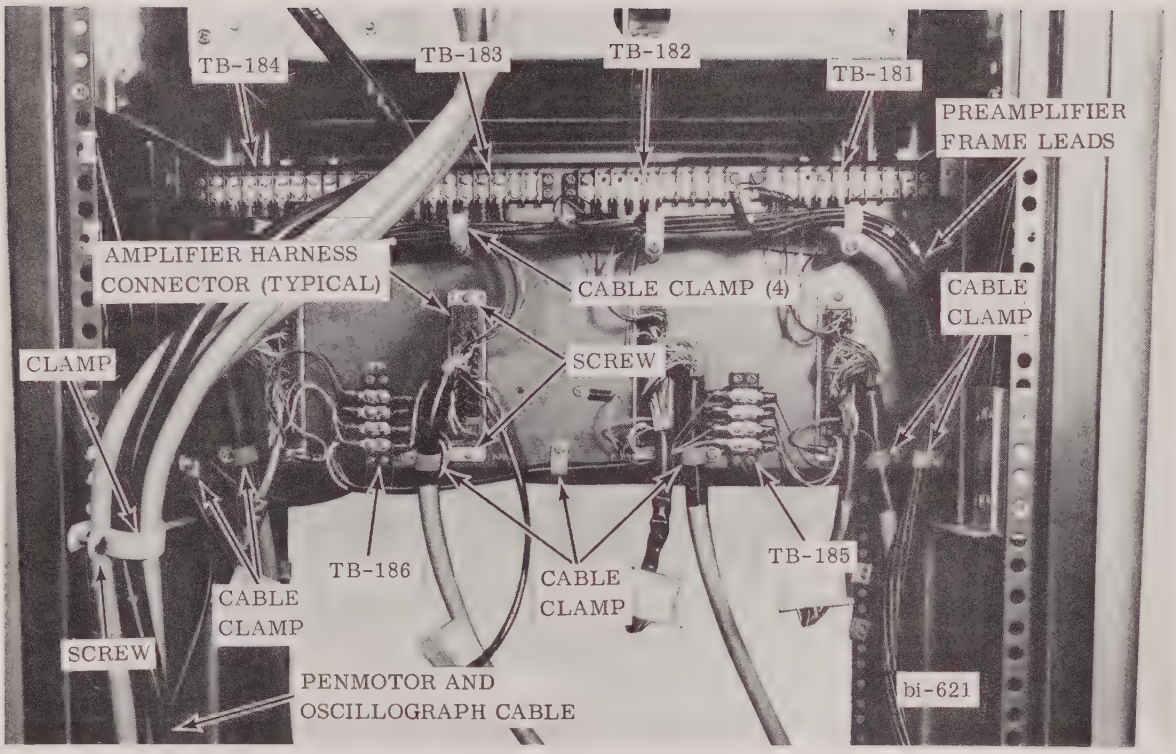

FIGURE 6-29 DRIVE AMPLIFIER FRAME – REAR VIEW

0 – No Amplifier

1 – Amplifier for 80mm penmotor

2 – Amplifier for 40mm penmotor

8 – Amplifier for Multimarker penmotor

2. Tighten hex spacer securely while holding index key in place.

3. Install drive amplifier in selected channel and lock in place with quarter-turn fastener (Fig. 6-30).

NOTE: If two adjacent 80mm penmotors are being driven by one dual-channel amplifier, the amplifier and associated harness may be installed in either of the drive frame locations. The other location will not be used.

4. Install 32-pin amplifier harness connector on rear of drive frame to mate with drive amplifier (pins 16 and 32 toward top of frame).

5. Secure connector to frame with two screws. Use bottom screw to ground green lead from pin 19 on the connector.

6. Connect tagged leads to terminals 1 thru 5 on appropriate terminal board (TB-181 thru TB-184).

NOTE: If amplifier calibration unit is used, leads are attached to appropriate terminal board (TB-181A thru TB-184A).

7. Attach penmotor harness to rear of drive frame with cable clamp and screw.

8. Connect white, grey, black, and red leads to terminals 1 thru 4 on terminal board mounted between 32-pin connectors (TB-185 or TB-186).

9. If there is no relay in the location corresponding to the 32-pin connector just installed, add K-190 relay to the relay chassis assembly.

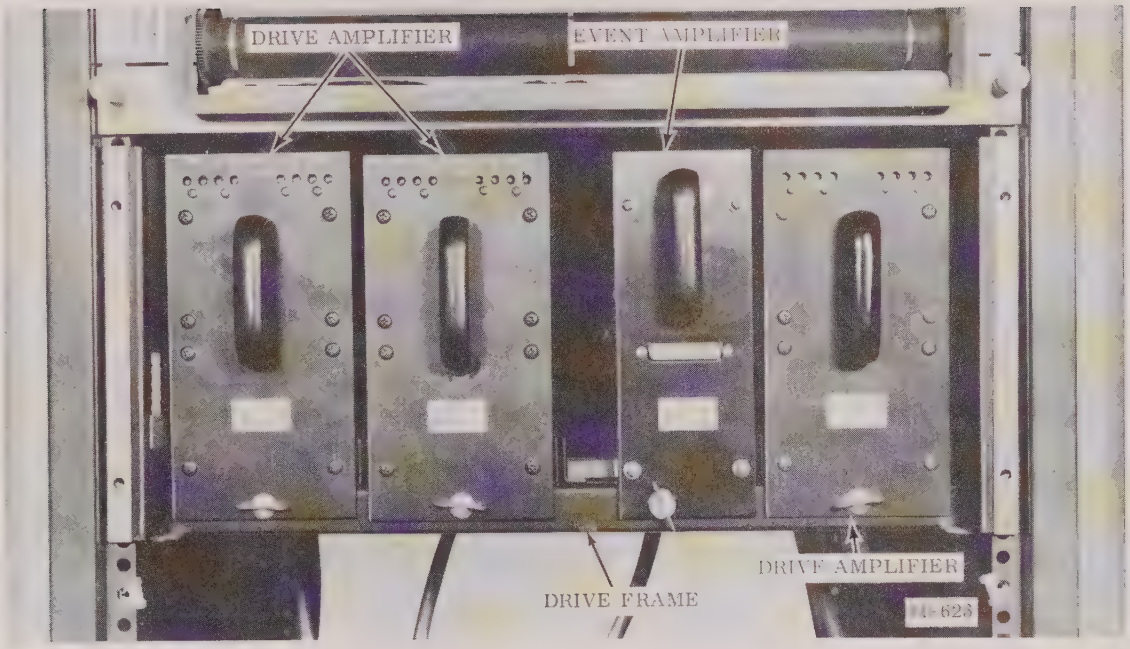

FIGURE 6-30 DRIVE AMPLIFIER COMBINATION—REFERENCE

CAUTION: USE ONLY SCREWS SUPPLIED WITH KIT AS LONGER SCREWS WILL DAMAGE RELAYS.

10. Install connectors J-190A thru J-190D into proper position on relay chassis assembly.

NOTE: Notches on wiring side of connector should correspond to Detail A of drawing 461599.

11. Insert six pins into connector J-195 or J-196 so that they snap into place securely.

12. Position relay chassis assembly on rear of drive frame and secure with two screws.

13. Connect four plugs to J-190A thru J-190D on relay chassis assembly.

14. Position dust cover at rear of drive frame and secure with two screws.

Unit is now ready for operation.

d. Installation of Multimarker Amplifier and Harness Kit

The procedure for converting to multimarker channels using the Multimarker Amplifier and Harness Kit, Model 11-2298-00, is identical to the procedure for converting to 40mm and 80mm channels with the following exceptions:

1. When connecting leads to terminal board on rear of drive frame (TB-181 thru TB-184), terminals 1 thru 4 are not used. Connections are made to terminals 5, 6, and 7 as indicated by marker tabs on leads.

2. Signal input connections are made to the 25-pin connector at the front of the event amplifier (Fig. 6-30) using mating connector supplied with unit.

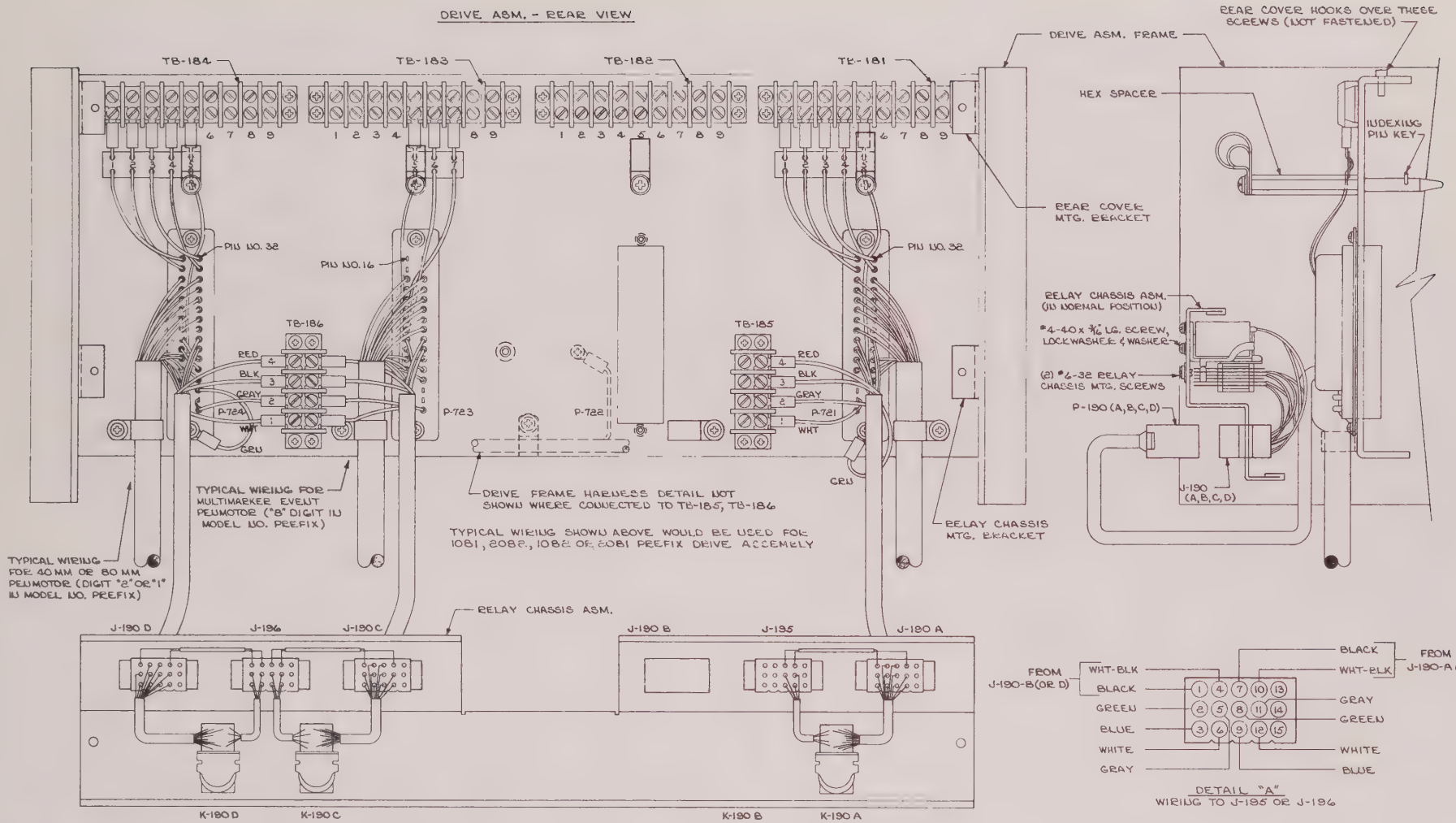

PROCEDURE

I. FOR 80MM AMPLIFIER & HARNESS KIT (MODEL 11-2291-00) AND 40MM AMPLIFIER & HARNESS KIT (MODEL 11-2292-00).
   A. SELECT DRIVE AMPLIFIER LOCATION IN FRAME IN LINE WITH PENMOTOR TO BE CONTROLLED.
      NOTE: IF TWO ADJACENT 80MM PENMOTORS ARE BEING DRIVEN BY ONE DUAL AMPLIFIER, THE AMPLIFIER AND ASSOCIATED HARNESS MAY BE INSTALLED IN EITHER OF THE CORRESPONDING DRIVE AMPLIFIER FRAME LOCATIONS. THE OTHER LOCATION WILL THEN NOT BE USED.
   B. IF REQUIRED REMOVE BACK FRAME COVER, LOOSEN THE HEX SPACER BELOW TERMINAL #5 OF THE 9 TERMINAL CONNECTOR STRIP (TB-184 TYPICAL) AND ALIGN THE INDEX PIN KEY TO MATCH THE DRIVE AMPLIFIER. TIGHTEN THE HEX SPACER SECURELY WHILE HOLDING THE INDEX KEY IN PLACE. FOR FACTORY INSTALLATION, USE FIXTURE AVAILABLE.
   C. INSTALL DRIVE AMPLIFIER IN CHOSEN CHANNEL AND LOCK IN PLACE WITH 1/4 TURN FASTENER PROVIDED.
   D. REMOVE THE RELAY CHASSIS ASSEMBLY BY REMOVING THE TWO END SCREWS TO PERMIT ACCESS TO THE TERMINALS BEHIND IT.
   E. FROM THE REAR OF THE FRAME, INSTALL THE 32 PIN CONNECTOR SO THAT IT MATES WITH THE DRIVE AMPLIFIER (PINS #16 & #32 UP).
   F. FASTEN THE CONNECTOR IN PLACE WITH THE #4-40 X 3/8" LONG SCREWS PROVIDED, USING THE BOTTOM SCREW TO GROUND THE GREEN WIRE FROM PIN #19 OF THE CONNECTOR.
   G. CONNECT THE TAGGED WIRES TO TERMINALS #1 THRU #5 OF THE 9 TERMINAL CONNECTOR STRIP ABOVE THE DRIVE AMPLIFIER CONNECTOR. (TO AMPLIFIER CAL. UNIT IF USED-SEE SEPARATE INSTRUCTIONS).
   H. FASTEN THE HEAVY CABLE TO THE PENMOTOR CONNECTOR ON THE FRAME AS SHOWN, USING THE NYLON CLIPS PROVIDED.
   I. CONNECT THE WHITE, GRAY, BLACK AND RED WIRES TO TERMINALS 1, 2, 3 AND 4 OF THE BARRIER STRIP BETWEEN THE 32 PIN CONNECTORS WITHOUT DISTURBING THE WIRES ALREADY THERE FROM THE FRAME HARNESS.
   J. ADD THE K-190 RELAY ASSEMBLY TO THE RELAY CHASSIS, USING THE EXACT HARDWARE SUPPLIED, IN THE LOCATION CORRESPONDING TO THE 32 PIN CONNECTOR JUST INSTALLED. (USE OF LONGER SCREWS WILL DAMAGE RELAYS)
   K. SNAP THE CONNECTOR, J-190, IN THE PROPER LOCATION MAKING THE POSITION OF THE NOTCHES ON THE WIRING SIDE OF THE CONNECTOR CORRESPOND AS IN THE DIAGRAM.
   L. POKE IN THE 6 PINS TO J-195 (OR J-196) SO THAT THEY SNAP IN PLACE SECURELY. SEE DETAIL "A".
   M. COMPLETE OTHER CHANNELS.
   N. REPLACE RELAY ASSEMBLY AND MOUNTING SCREWS.
   O. PLUG WHITE CONNECTORS P-190A THRU D (AS USED) INTO CORRESPONDING J-190 CONNECTORS.
   P. REPLACE REAR COVER ON DRIVE AMPLIFIER FRAME.

II. MULTIMARKER HARNESS AND AMPLIFIER KIT (MODEL 11-2298-00) REFER TO SECTION I EXCEPT FOR FOLLOWING NOTES:
   A. CONNECTIONS TO TB-183 (TYPICAL) ARE MADE TO TERMINALS #5, 6 AND 7 AS INDICATED BY THE MARKER TABS ATTACHED TO THE HARNESS WIRES. TERMINALS 1, 2, 3 AND 4 ARE NOT USED.
   B. NO GREEN WIRE WITH GROUND LUG IS PROVIDED.
   C. INPUT CONNECTIONS TO THE DRIVE AMPLIFIER ARE MADE TO THE 25 PIN CONNECTOR UNDER THE CARRYING HANDLE USING THE MATING CONNECTOR SUPPLIED. REFER TO SCHEMATIC OF DRIVE AMP OR INSTRUCTION MANUAL FOR TERMINAL DATA.

III. CABLE DRESS TO OSCILLOGRAPH PENMOTORS.
   A. CABLES CAN BE BROUGHT UP FROM UNDER EITHER OR BOTH SIDES OF THE DRIVE FRAME ASSEMBLY (NOT NORMALLY UP BEHIND WHERE THE CABLES PREVENT EASY ACCESS TO THE TERMINALS UNDER THE REAR COVER.)
   B. DO NOT LENGTHEN OR SHORTEN THE CABLES - (DOES NOT AFFECT MULTIMARKER)
   C. WHERE CABLES MUST FLEX PROTECT AGAINST SHARP BENDS OR METAL BURRS.

FIGURE 6-31 AMPLIFIER AND HARNESS INSTALLATION

SECTION VII

CALIBRATION

7.1 GENERAL

The Brush 1707 Recorder is calibrated at the factory to insure top performance. Under normal conditions it is not necessary to adjust the calibration; however, because of parts repair or replacement, it may be necessary to calibrate the effected channel or the entire system. No attempt should be made to adjust the unit unless a performance check verifies that the system is definitely out of calibration. This section contains test and calibration procedures for the oscillograph, drive amplifiers, event amplifiers, amplifier calibration unit and data loss unit.

Refer to preamplifier manual for calibration of the preamplifiers.

NOTE: Interchanging amplifier plug-in assemblies will result in impaired accuracy and require recalibration.

7.2 TEST EQUIPMENT

The following is a list of recommended test equipment required for calibration of the system:

1. Fluke Meter, Model 803
2. Hewlett-Packard 202A Low Frequency Function Generator.
3. Variable D.C. Power Supply (0-15 volts).
4. Battery operated 2.500 volt power supply.

7.3 PRELIMINARY CHECKS

a. A.C. Isolation Check

Electrically check for isolation of cabinet or frame from A.C. power at terminal board TB-1 on main connector panel. All fuses must be in place and power switch in ON position. Reading should be 10 megohms minimum from terminals 3 or 4 to frame.

b. Ground Check

Check that terminals 5 and 6 of TB-1 on main connector panel are tied to frame ground. Reading should be less than two ohms.

c. Power Consumption

1. Connect unit to a 115 volt, 60 cps power source thru a voltmeter-ammeter-wattmeter variable voltage device.
2. Bring voltage on unit up to 115 volts, rms, ±2 volts.
3. Approximately 140 watts or 1.5 amps is normal without chart motor running.

d. Oscillograph and Drive Component Checks

1. Remove all signal inputs at terminals 1 thru 4 on TB-181 thru TB-184 of drive frame.
2. Connect a signal and pen position source to terminals 1 thru 4 on TB-181 thru TB-184.

NOTE: Signal source should be capable of being applied to one channel at a time.

3. Inspect oscillograph inking system for potential leak points.
4. Check pens for correct pen pressures. (Refer to Paragraph 5.4.28).
5. Set all pen position controls to their approximate mechanical centers.
6. Set signal input source to zero.
7. Operate oscillograph at 5 millimeters per second and release X.01 pushbutton.
8. Pens hould move to position determined by pen position control.
9. Recheck for ink leaks now that pressure has been applied.
10. Turn on event marker switches one at a time to make sure timer will operate with either one.
11. Event markers should operate as follows:
    (a) Deflect to left for one second pulses and to right for ten second pulses.

(b) Deflect .03 inch minimum and .045 inch maximum.

(c) Overshoot of less than .02 inch.

12. Place event marker switches in external position and check thru pins on connector J-5 on main connector panel for the following event marker deflections:

Connect pin A to pin B — Left event marker deflects to left

Connect pin C to pin D — Left event marker deflects to right

Connect pin E to pin F — Right event marker deflects to left

Connect pin G to pin H — Right event marker deflects to right

13. The following procedure is performed on systems equipped with data loss units. This test is designed to uncover defective wiring to data loss lights and improper amplifier or power supply operation.

NOTE: Tests are made with oscillograph operating at one millimeter per second and signal input to TB-181 thru TB-184 shorted.

(a) Hold pen approximately one-half inch from tip and move pen ten divisions from center. Data loss light for that channel only should light and data loss relay should close.

(b) Measure for less than one ohm resistance and gradually release pen.

(c) Repeat procedure in opposite direction. Zero lines separation after each deflection should be less than 1/2 division.

(d) Gently grasp rear of pen and deflect pen until data loss indicator light reaches maximum brilliance. This should happen (amplifier saturation) at 2 to 4 divisions deflection in both directions from zero position.

(e) Gently grasp rear of pen and gradually move pen in both directions to chart edge. Pen should move evenly across chart without interruption.

(f) Data loss lights should be equally bright for left or right deflection.

NOTE: Lights at maximum brillance indicate amplifier saturation.

(g) Repeat steps (a) thru (f) for each pen.

7.4 CHECKOUT OF DRIVE AND OSCILLOGRAPH OPERATION

1. Check each pen skew by gently grasping rear of pen and moving pen thru its entire travel.

NOTE: Chart must be stopped.

2. Line of pen tip should be parallel to a chart time line within .005 inch.

3. Check locatin of pen tips. All pen traces are to fall in a band, .020-inch wide, parallel to time lines on chart paper.

4. Check that chart paper is equal distances, within .03 inch, from side plates.

5. The standard event marker undeflected trace should be centered in white margin.

6. Check for writing quality.

(a) Operate oscillograph at one millimeter per second with pens at chart center. Trace should be approximately .010 inch wide. Any pen writing a wider trace intermittently or continuously is not properly lapped.

(b) Operate oscillograph at five millimeters per second and wipe finger across trace one-half inch from pen tips. Any smearing indicates improper pen pressure.

(c) Repeat steps (a) and (b) above with a 0.01 cps full scale sine wave applied to pens. There should be no excess ink at any pen position.

7.5 AMPLIFIER CALIBRATION UNIT

a. Calibration

The amplifier calibration unit may require adjust-

ment if it has been disassembled or there has been parts replacement. No attempt should be made to adjust the unit unless the following performance check verifies that unit is out of calibration.

1. Set zero reference potentiometer R-171 to produce equal voltage between its slider and outer two ends of R-167 and R-168.

2. Voltage difference should not exceed ±0.5 millivolts.

3. Depress one of the pushbuttons in channel selector switch.

4. Depress CTR pushbutton in Cal signal switch.

5. Set centering potentiometer R-170 to produce zero (0 volts ±4 millivolts) using most sensitive null range on a D.C. vacuum tube voltmeter.

6. Depress +25 pushbutton in Cal signal switch.

7. Adjust potentiometer R-164 to produce a negative -2.5 volts ±1 millivolt at terminal 9 and 10 on TB-106.

8. Depress -25 pushbutton in Cal signal switch.

9. Check for a positive ±2.5 volts +4 millivolts at terminals 9 and 10 on TB-106.

b. Temperature Compensation

The temperature compensating resistor R-169 is selected at the factory during assembly. If zener diode CR-163 is replaced, the resistor may have to be changed. After the calibration unit is completely assembled, perform the following measurements and select the proper temperature compensating shunt resistor from the table below.

1. Connect unit to a 115 volt A.C. power source.

2. Connect a 50 K ohm dummy load across unit's output.

3. Make sure a relay is connected across 24 volt supply, either by means of standard relay assembly or an equivalent substitute.

4. Temporarily connect a 50 ohm resistor across temperature compensating diode CR-164.

5. Measure voltage V_z across zener CR-163 using a precision voltmeter (Fluke model 803 or equivalent).

6. Use this voltage to select final shunt resistance for temperature compensating resistor from table below:

V_z Zener Volts	Use Resistor Part No.	Resistance (Ohms)
5.32 - 5.55	5-119370-500	50
5.55 - 5.65	5-119370-750	75
5.65 - 5.88	None	None

7.6 DRIVE AMPLIFIER CALIBRATION

a. Preliminary

1. Turn OFF power to system.

2. Remove appropriate drive amplifier from frame and place amplifier upside down on working surface.

3. Connect one end of Extender Cable, Model 11-1508-03, to drive frame and other end to amplifier.

4. Turn ON power to system and select a slow chart speed.

5. Set I_{co} BAL control (D, Fig. 7-1) to mid-range (7.5 turns).

6. Set INT POS control (E, Fig. 7-1) to mid-range (7.5 turns).

7. Set CRS DAMP control (F, Fig. 7-1) to mid-range (7.5 turns).

8. Adjust left and right pen limiter potentiometers on front of drive amplifier for pen limits of approximately three lines past channel edge (Figure 7-2).

9. Press chart speed stop button and attach a voltmeter from either 1/8 ampere fuse on side plate to minus end of electrolytic capacitor mounted in a spring clip on one side plate.

10. Check for reading of -26 ± .5 volts. If necessary, adjust 26 volt control thru single access hole in frame member next to transformer for required voltage (A, Fig. 7-1).

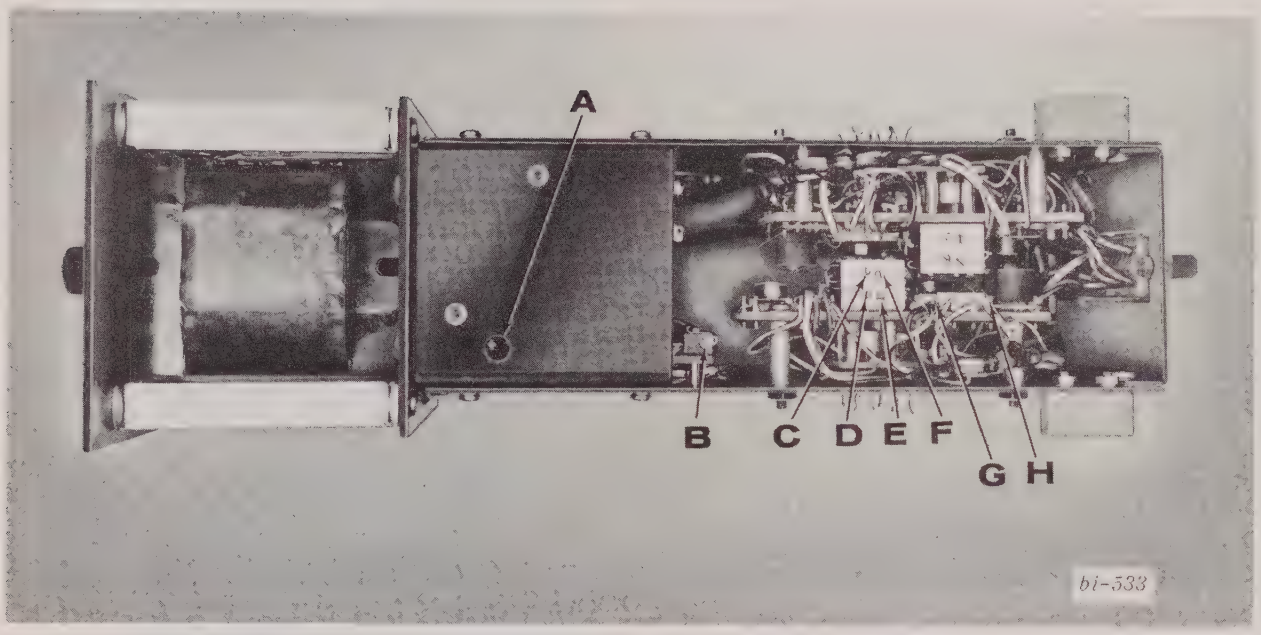

FIGURE 7-1 CALIBRATION TEST AND ADJUSTMENT POINTS

11. Attach a voltmeter from inside terminal of 100 ohm resistor (H, Fig. 7-1) to second terminal from adjusted potentiometers (G, Fig. 7-1) on amplifier board.

NOTE: A jumper lead replaces the 100 ohm resistor on Model 15-5221-11, but procedure remains the same.

12. Adjust 20 KC level control (B, Fig 7-1) for 7.0 ± .2 volts rms, on Model 15-5221-11 amplifier and 7.5 ± .2 volts, rms on Model 15-5221-21 amplifier.

13. Attach a voltmeter from inside terminal of 100 ohm resistor (H, Fig. 7-1) to stud of Q-4, Q-7, Q-8 or Q-11 on outside plate of drive amplifier and set EQL OVER control (C, Fig. 7-1) for -13 volts D.C.

14. Disconnect leads 1 thru 4 from terminal of approrpiate channels on drive frame (either TB-181, TB-182, TB-183 or TB-184).

15. Short leads 1 and 2 and, if necessary, adjust INT POS control (E, Fig. 7-1) until pen is exactly at chart center.

NOTE: If while shorting leads 1 and 2 the pen in another channel moves during INT POS adjustment, repeat procedure in step 13 with leads 3 and 4.

16. Alternately open and short appropriate leads (1 and 2) in channel being calibrated and observe for pen movement. If necessary, adjust I_{co} BAL control (D, Fig. 7-1) until there is a minimum or no pen movement.

17. If I_{co} BAL is adjusted, repeat step 12.

b. Gain Adjustment

1. Select a medium chart speed on the oscillograph control panel.

2. Apply 2.500 volts directly to appropriate leads on drive frame and check for pen deflection to edge of channel. If proper deflection is not obtained, adjust SPAN control on front of amplifier (Fig. 7-2) until pen deflects to channel edge.

NOTE: It is recommended that the 2.500 volts be applied using a battery operated power supply and monitored with a Fluke Meter (Model 803 or equivalent).

3. Pen should return to chart center ±0.2% when signal is removed.

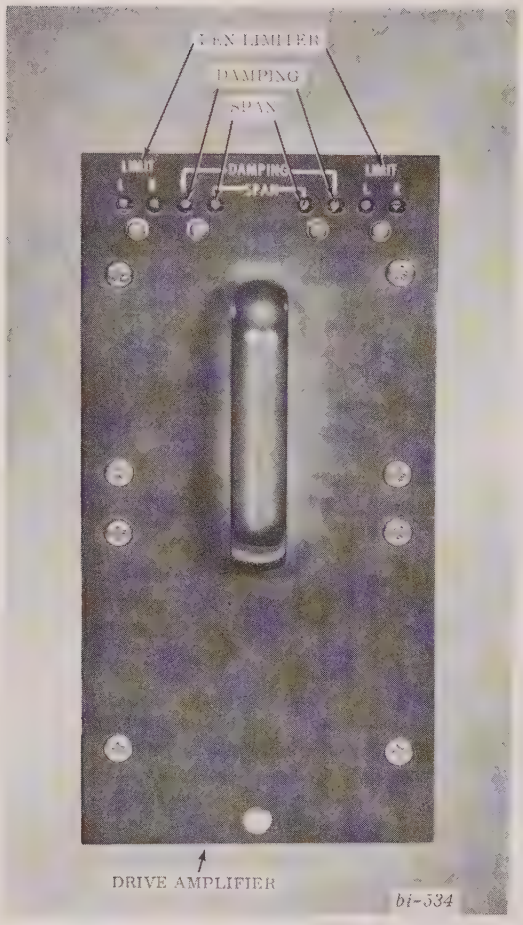

FIGURE 7-2 CALIBRATION EXTERNAL CONTROLS

c. Damping

1. Apply a 10 cps sine wave amplitude of 20% of full scale.

2. Switch frequency to 100 cps and, if necessary, adjust DAMPING control (Fig. 7-2) until trace amplitude is exactly 20% of full scale. Peak-to-peak amplitude should be flat within ±4% over entire range.

3. Apply a 5.5 cps full scale sine wave to 40mm channels (Model 15-5221-11 Drive Amplifier). On 80mm channels (Model 15-5221-21 Drive Amplifier), apply a 5.5 cps sine wave amplitude of 50% of full scale.

4. Switch frequency to 55 cps and, if necessary, adjust CRS DAMP control (F, Fig. 7-1) until 5.5 and 55 cps amplitudes are equal.

NOTE: Do not apply 55 cps signal for more than 3 seconds out of any 15 seconds while making these adjustments.

5. Repeat steps 1 thru 4 until all conditions are met. Use DAMPING control only to adjust 100 cps amplitude and CRS DAMP control only to adjust 55 cps amplitude.

NOTE: The following applies to Model 15-5221-21 Drive Amplifier only.

6. Apply a full scale one cps sine wave to 80mm channels and increase frequency to 35 cps peak-to-peak. If amplitude is not flat within ±2% of full scale, repeat steps 1 thru 4.

7. Turn off power to system.

8. Connect leads 1 thru 4 to terminals TB-181 thru TB-184 on drive frame.

9. Remove extender cable and plug amplifier into drive frame.

d. Limiter Adjustment

1. Apply an A.C. triangle wave of sufficient amplitude to allow pens to travel approximately two divsiions beyond full scale.

2. Adjust potentiometers (L and R, Fig. 7-2) until pen travel is one division beyond full scale at both edges of channel.

3. Apply a 0.2Hz triangle signal, full scale, to the input. Select a chart speed of 20 or 25mm/sec so that sides of triangle are at a 90 degree angle. Visually check sides of triangle for straightness.

Drive Amplifier is now calibrated.

e. System Frequency Response (15-5221-11)

NOTE: Apply all input signals thru preamplifier inputs. Test each channel individually.

1. Apply a 10-cps sine wave amplitude of 12 divisions peak-to-peak and increase frequency to 100 cps. If an amplitude is not flat within ±1.0 division, repeat steps 1 thru 4 in Damping procedure.

2. Apply a full scale 10-cps sine wave and increase frequency to 55 cps. Peak-to-peak amplitude should be flat within +1.0 division.

f. Frequency Response (15-5221-21)

NOTE: Apply all input signals thru preamplifier inputs. Test each channel individually.

1. Apply a 10-cps sine wave amplitude of six divisins peak-to-peak and increase frequency to 100 cps. If amplitude is not flat within ±1.0 division, repeat steps 1 thru 4 in damping procedure.

2. Apply a 10 cps sine wave amplitude of 25 divisions peak-to-peak and increase frequency to 55 cps. Amplitude should be flat within ±1.0 division

3. Apply a full scale 10 cps sine wave and increase frequency to 30 cps. Peak-to-peak amplitude should be flat within +1.0 division.

7.7 EVENT AMPLIFIER CALIBRATION

a. Confidence Check

1. Connect test pushbuttons to terminals 5, 6, and 7 on the drive frame position containing an event amplifier (TB-181 thru TB-184).

2. Turn on power to system.

3. Select a slow chart speed on the oscillograph control panel.

4. Press high test pushbutton. This will short terminals 5 and 6, producing a 5-volt signal to each channel, and cause the event markers to operate.

5. Measure this signal at the power supply board and, if necessary, adjust potentiometer R-821 until 5 volts is obtained.

6. Press high and low test pushbuttons simultaneously. This will short terminals 5, 6, and 7 and produce a 3.75 to 4-volt signal to each channel. Event markers should not operate.

NOTE: The above procedures does not pertain to systems equipped with an Amplifier Calibration unit since test pushbuttons are located on the panel.

b. Calibration

If the above procedure does not produce the desired results, calibrate the event amplifier as described below.

1. Apply a + 4.6 (–0, +2) volt D.C. signal to connector J-801 on front of event amplifier.

2. Adjust potentiometer R-809 on each printed circuit board so that event markers just operate.

NOTE: All event marker pens should deflect to left.

3. Apply a maximum +4.00 volt D.C. signal to connector J-801. Event markers should NOT operate.

4. Increase signal to 5.0 volts. All event markers should operate.

Unit is now calibrated.

7.8 DATA LOSS FUNCTIONS

NOTE: This procedure applies to systems equipped with data loss units.

1. Set data loss contacts as follows:

   (a) Set two nylon-tipped screws at ends of actuator lever to close switches approximately on-half division beyond full scale.

   (b) Set pen position control on unit being calibrated until pen is first at its right limit and then at its left limit.

   (c) Remove plugs from jacks and place an ohmmeter across plugs. Reading should be less than two ohms with pen at either electrical limit.

   (d) Install plugs and run pens to left and right limits. Read continuity for each channel on pins of J-197 connector at rear of unit. Resistance should drop from infinity to below one ohm.

2. Apply a 10-cps sine wave amplitude of ten divisions and increase frequency until data loss indicator lights illuminate and remote data loss contact shows continuity. Measure continuity on terminals at rear of unit for corresponding channel.

3. Set relay pickup adjustment so that remote data loss contacts actuate at 110±5 Hz.

4. Repeat steps 2 and 3 for a full scale signal.

Data loss contacts should actuate at 38 to 50 cps for 40mm channels and 19 to 31 cps for 80mm channels.

SECTION VIII

PARTS IDENTIFICATION

8.1 GENERAL

This equipment has been accurately calibrated and adjusted before shipment from the factory and should give long, trouble-free service. For servicing beyond the scope of the instructions contained in this manual or the technical equipment available, contact your nearest Gould Service Engineer listed on the warranty card shipped with the recorder.

The following parts lists and schematic diagrams are designed to assist in servicing and repairing the equipment. For replacement parts, refer to the appropriate figures and parts lists in this section. The items listed present the lowest assembly or part, but do not necessarily imply they are for sale.

Contact your local service branch for availability of salable components, assemblies or parts.

To assure prompt and satisfactory delivery of replacement parts, include the following with the purchase order:

1. Name and model number of the instrument.
2. Description of the part as listed in the manual.
3. Gould part number.

NOTE: Do not use the SYMBOL NUMBER from the parts list for identifying desired parts on the order.

CONFIGURATION PARTS LIST
MODEL 0000-1707-110 SYSTEM
FIGURE 8-1

ITEM NO	MODEL NUMBER	PART NUMBER	DESCRIPTION
1	11-1154-60		Cabinet Assy
2	4185 Series		Preamplifier, per customer order
3	11-1603-10		System Power Panel
4	0000-2607-70		Oscillograph Assy
5	0000-5540-00		Drive Assy
6		461007	Panel, Blank, 5-1/4 inches
		249961	Panel shim
		245244-02	Self-locking floating nut
		1-261111-10	Retainer, screw
		31-12534-0220	Screw, Mach.- Oval Head
		31-120650-10	Washer, Csk. - hollow
		126138-9	Washer, Nylon
7		449892	Panel, Blank, 17 1/2 inches
8	11-1601-11		Main Connector Panel
9		466758	Panel, Blank, 10 1/2 inches
		245244-02	Self-locking floating nut
		1-261111-10	Retainer, screw
		31-121534-0220	Screw, Mach - Oval Head
		31-120650-10	Washer, Csk-hollow

FIGURE 8-1 0000-1707-110 SYSTEM CONFIGURATION

CONFIGURATION PARTS LIST
MODEL 0000-1707-120 SYSTEM
FIGURE 8-2

ITEM NO	MODEL NUMBER	PART NUMBER	DESCRIPTION
1	11-1154-60		Cabinet Assy
2	4X00 Series		Preamplifier, per customer order
3	11-4588-13, -14		Preamplifier Frame Assy
4	11-1603-10		System Power Panel
5	0000-2607-70		Oscillograph Assy
6	0000-5540-00		Driver Assy
7		461007	Panel, Blank, 5-1/4 inches
		249961	Panel Shim
		245244-02	Self-locking floating nut
		1-261111-10	Retainer, screw
		31-121534-0220	Screw, Mach.-Oval Head
		31-120650-10	Washer, Csk. - hollow
		126138-9	Washer, Nylon
8		449890	Panel, Blank, 10 1/2 inches
9	11-1601-11		Main Connector Panel
10		466758	Panel, Blank, 10 1/2 inches
		245244-02	Self-locking floating nut
		1-261111-10	Retainer, screw
		31-121534-0220	Screw, Mach.-Oval Head
		31-120650-10	Washer, Csk.-hollow

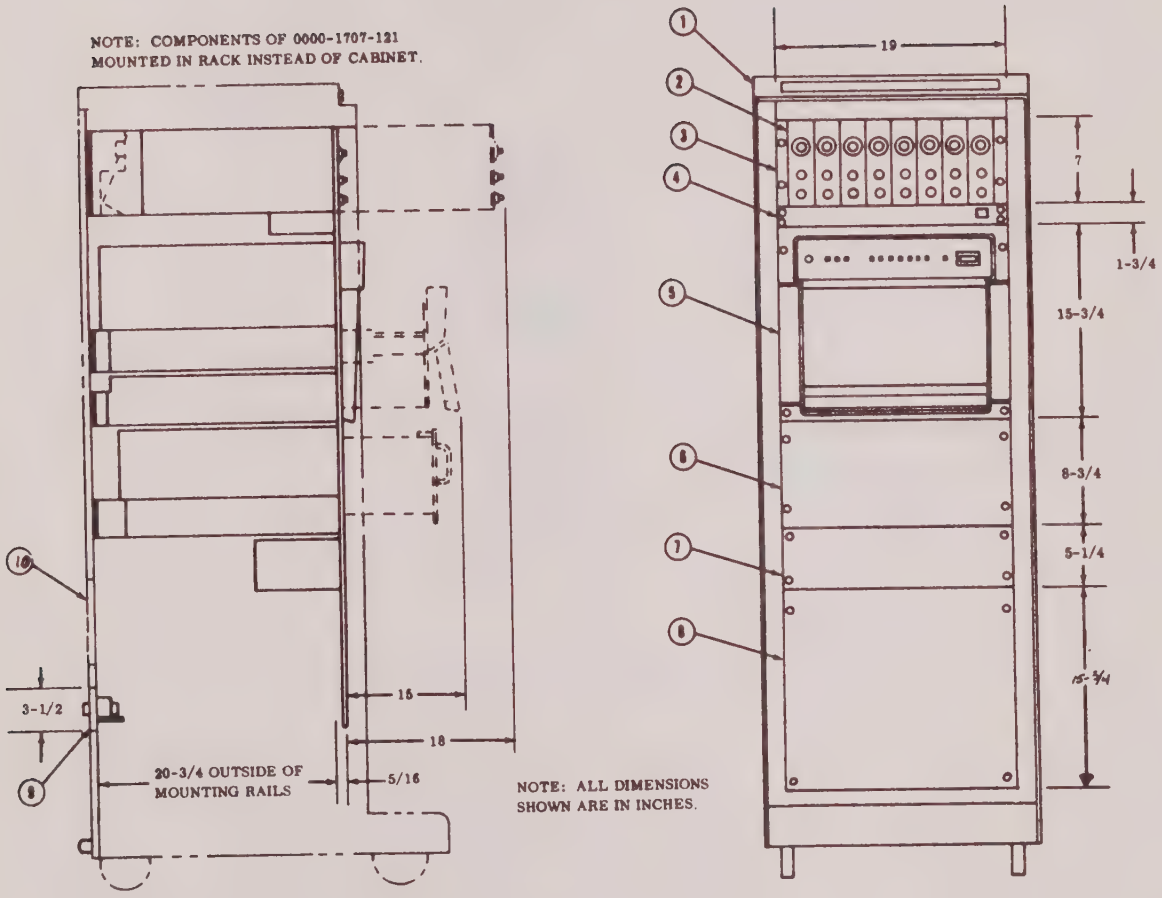

FIGURE 8-2 0000-1707-120 SYSTEM CONFIGURATION

CONFIGURATION PARTS LIST
MODEL 0000-1707-140 SYSTEM
FIGURE 8-3

ITEM NO	MODEL NUMBER	PART NUMBER	DESCRIPTION
1	11-1154-60		Cabinet Assy
2	4400 Series		Preamplifier, per customer order
3	11-1603-10		System Power Panel
4	0000-2607-70		Oscillograph Assy
5	0000-5540-00		Drive Assy
6		461007	Panel, Blank, 5-1/4 inches
		249961	Panel Shim
		245244-02	Self-locking floating nut
		1-261111-10	Retainer, screw
		31-121534-0220	Screw, Mach.-Oval Head
		31-120650-10	Washer, Csk.-hollow
		126138-9	Washer, Nylon
7		449892	Panel, Blank, 17 1/2 inches
8		466758	Panel, Blank, 10 1/2 inches
		245244-02	Self-locking floating nut
		1-261111-10	Retainer, screw
		31-121534-0220	Screw, Mach.-Oval Head
		31-120650-10	Washer, Csk.-hollow
9	11-1601-11		Main Connector Panel

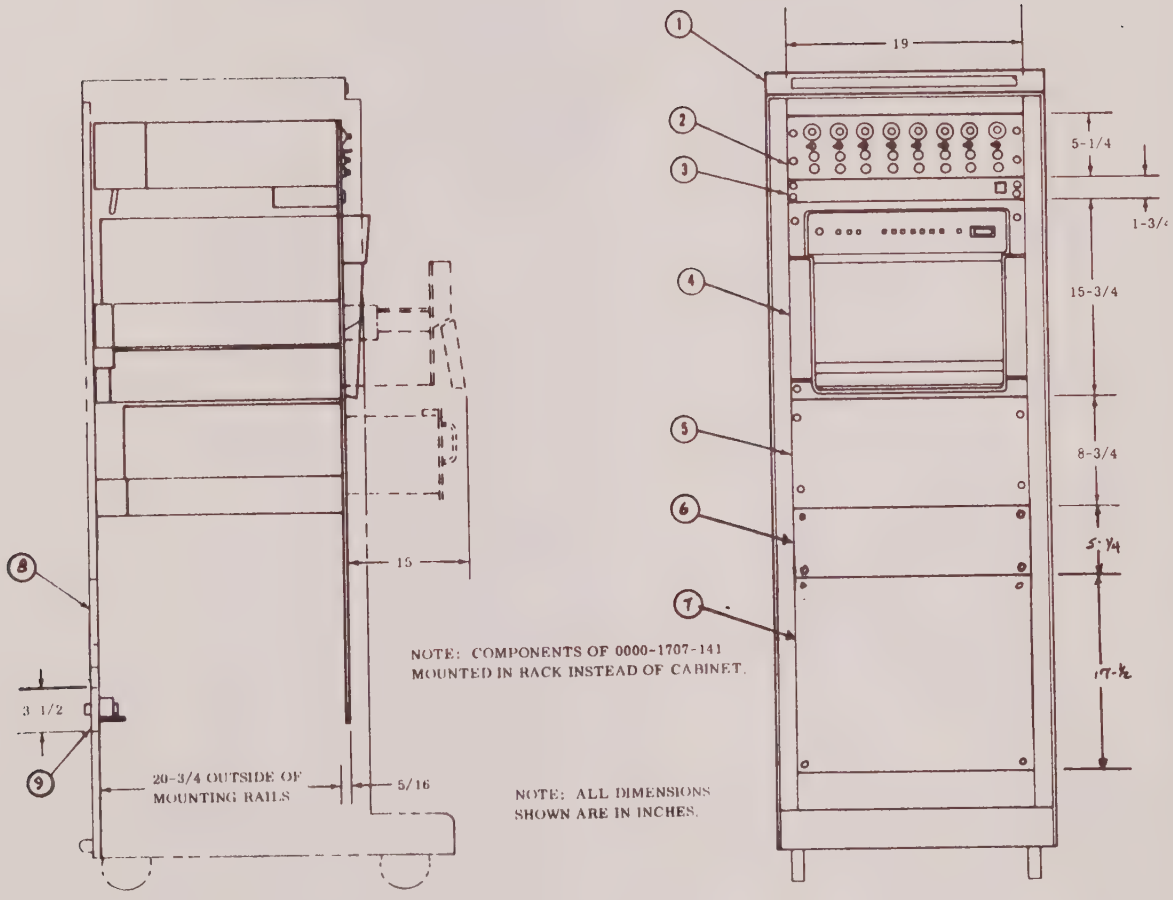

FIGURE 8-3 0000-1707-140 SYSTEM CONFIGURATION

CONFIGURATION PARTS LIST
MODEL 0000-1707-210 SYSTEM
FIGURE 8-4

ITEM NO	MODEL NUMBER	PART NUMBER	DESCRIPTION
1	11-1140-60		Cabinet Assy
2		461006	Panel, Blank, 1-3/4 inches
		249961	Panel Shim
		245244-02	Self-locking floating nut
		1-261111-10	Retainer, screw
		31-121534-0220	Screw, Mach. - Oval Head
		31-120650-10	Washer, Csk.-hollow
		126138-9	Washer, Nylon
3	4100 Series		Preamplifier, per customer order
4	11-1603-10		System Power Panel
5	0000-2607-60		Oscillograph
6	0000-5540-00		Drive Assy
7		461008	Panel, Blank, 7 inches (same attaching parts as item 2)
8		261022	Edging, Protective
9	11-1601-11		Main Connector Panel
10		444405	Panel, Blank, slotted, 1-3/4 inches
		466758	Panel, Blank, 10 1/2 inches
		245244-02	Self-locking floating nut
		1-261111-10	Retainer, screw
		31-121534-0220	Screw, Mach. - Oval Head
		31-120650-10	Washer, Csk. - hollow
		2-128693-1	Grommet, Caterpillar
11		843901-20	Door Assy

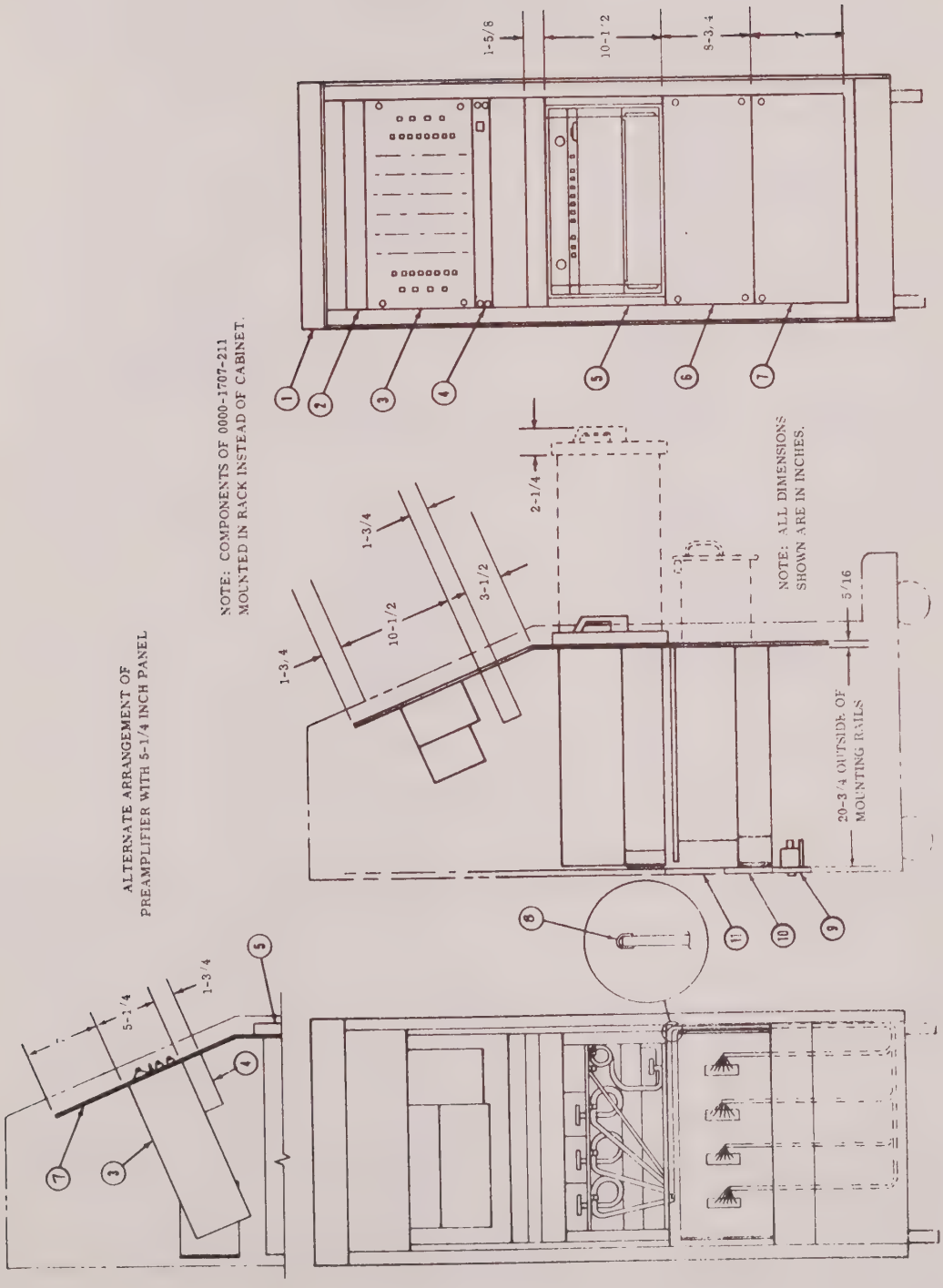

FIGURE 8-4 0000-1707-210 SYSTEM CONFIGURATION

CONFIGURATION PARTS LIST
MODEL 0000-1707-220 SYSTEM
FIGURE 8-5

ITEM NO	MODEL NUMBER	PART NUMBER	DESCRIPTION
1	11-1140-60		Cabinet Assy
2		461007	Panel, Blank, 5-1/4 inches
		245244-02	Self-locking floating nut
		1-261111-10	Retainer, screw
		31-121534-0220	Screw, Mach. - Oval Head
		31-120650-10	Washer, Csk. - hollow
		126138-9	Washer, Nylon
3	4X00 Series		Preamplifiers, per customer order
4	11-4588-13, -14		Preamplifier Frame Assy
5	11-1603-10		System Power Panel
6	0000-2607-60		Oscillograph
7	0000-5540-00		Drive Assy
8		461006	Panel, Blank, 1-3/4 inches (same attaching parts as item 2)
9	11-1601-11		Main Connector Panel
10		444405	Panel, Blank, slotted, 1-3/4 inches
		466758	Panel, Blank, 10 1/2 inches
		245244-02	Self-locking floating nut
		1-261111-10	Retainer, screw
		31-121534-0220	Screw, Mach. - Oval Head
		31-120650-10	Washer, Csk.-hollow
		2-128693-1	Grommet, Caterpillar
11		261022	Edging, Protective
12		843901-20	Door Assy

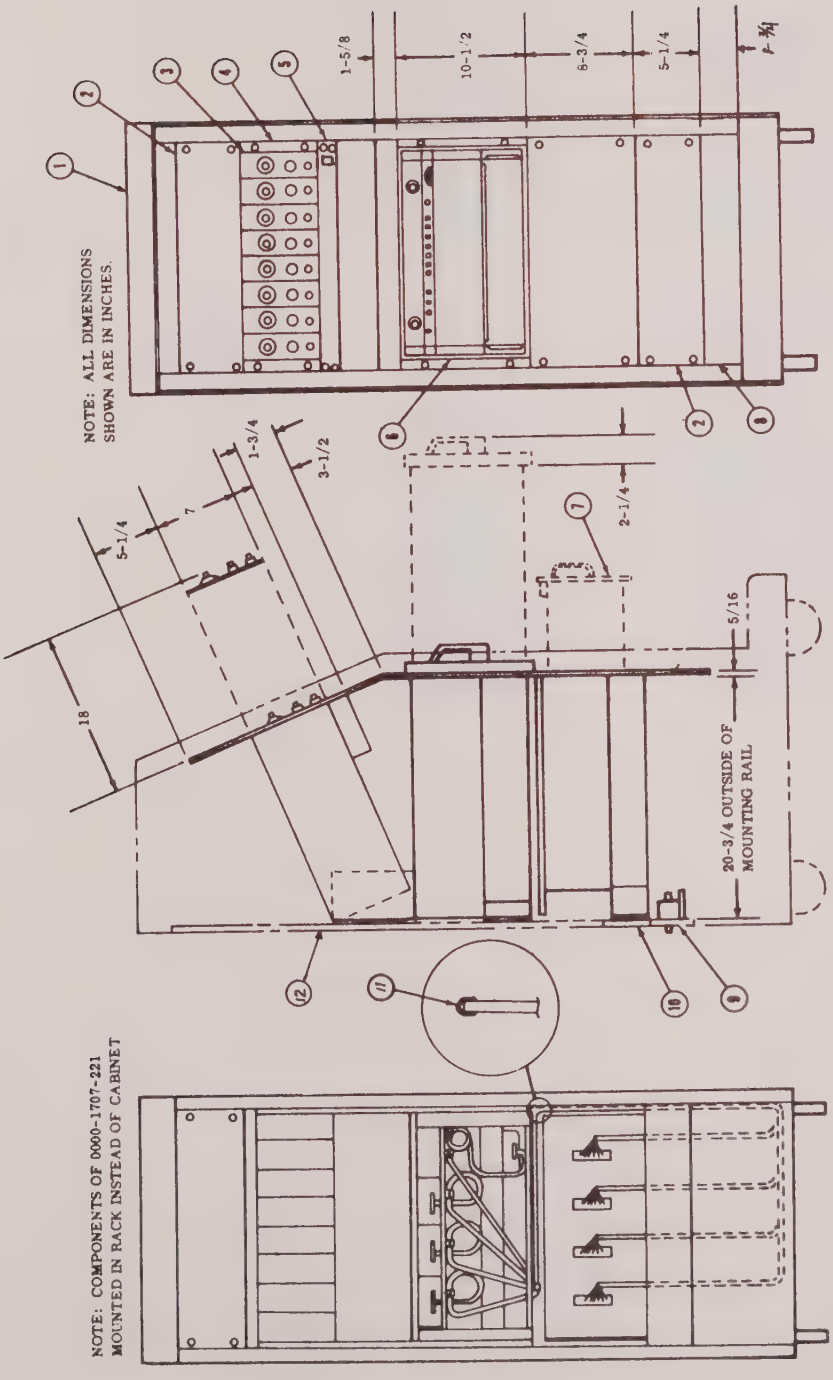

FIGURE 8-5 0000-1707-220 SYSTEM CONFIGURATION

CONFIGURATION PARTS LIST
MODEL 0000-1707-240 SYSTEM
FIGURE 8-6

ITEM NO	MODEL NUMBER	PART NUMBER	DESCRIPTION
1	11-1140-60		Cabinet Assy
2		461008	Panel, Blank, 7 inches
		249961	Panel Shim
		245244-02	Self-locking floating nut
		1-261111-10	Retainer, screw
		31-121534-0220	Screw, mach.-Oval Head
		31-120650-10	Washer, Csk.-hollow
		126138-9	Washer, Nylon
3	4400 Series		Preamplifier, per customer order
4	11-1603-10		System Power Panel
5	0000-2607-60		Oscillograph
6	0000-5540-00		Drive Assy
7		843901-20	Door Assy
8		261022	Edging, Protective
9	11-1601-11		Main Connector Panel
10		444405	Panel, Blank, slotted, 1-3/4 inches
		466758	Panel, Blank, 10 1/2 inches
		245244-02	Self-locking floating nut
		1-261111-10	Retainer, screw
		31-121534-0220	Screw, Mach. - Oval Head
		31-120650-10	Washer, Csk. - hollow
		2-128693-1	Grommet, Caterpillar

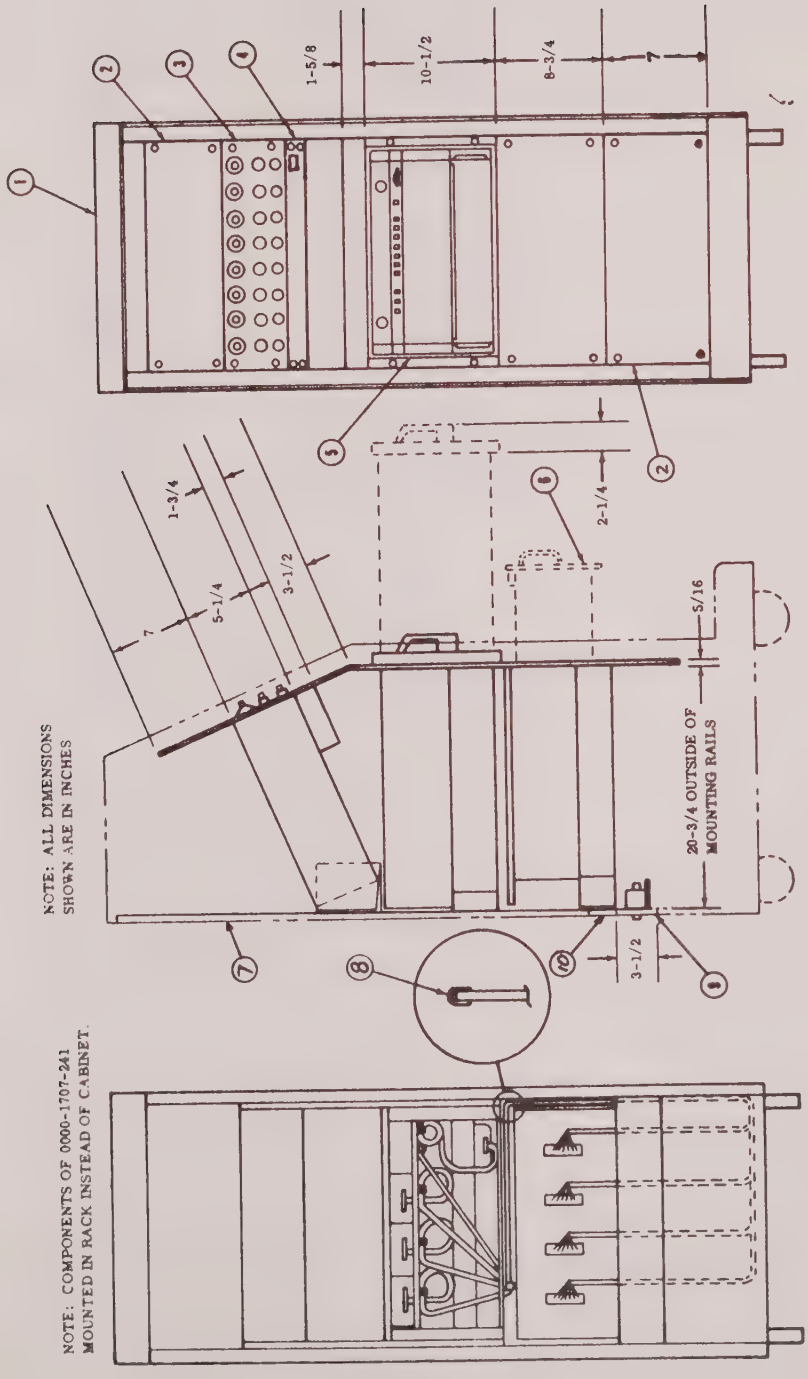

FIGURE 8-6 0000-1707-240 SYSTEM CONFIGURATION

EXPLODED VIEW PARTS LIST
0000-2607-60 OSCILLOGRAPH FRONT PANEL AND FRAME ASM.
FIGURE 8-7

ITEM NO	PART NUMBER	DESCRIPTION	SYMBOL NO
1	848362	Front Panel	
2	248361	Ammeter, D.C.	M-701
3	347834	Pushbutton Switch, 11 pos.	S-702
4	648308	Knob Asm.	
5	246552-1	Pushbuttons	
6	1-241774-8	Light, Indicator	DS-701
7	231965	Socket, Starter	
8	231964	Starter, Fluorescent Lamp	S-711
9	447940	Switch, Rotary	S-707,S-708
10	448240-1	Frame	
11	247510	Rod, Push	
12	247503	Tube, Interlocking	
13	448371-2	Rack Slide, Set	
14	248253	Plate, Trigger	
15	240161-424	Pin	
16	247426	Trigger	
17	247536	Spring	
18	231962	Ballast	RT-701
19	232135	Lamp Holder	XDS-701,XDS-702
20	232136	Lamp, Flourescent	DS-702

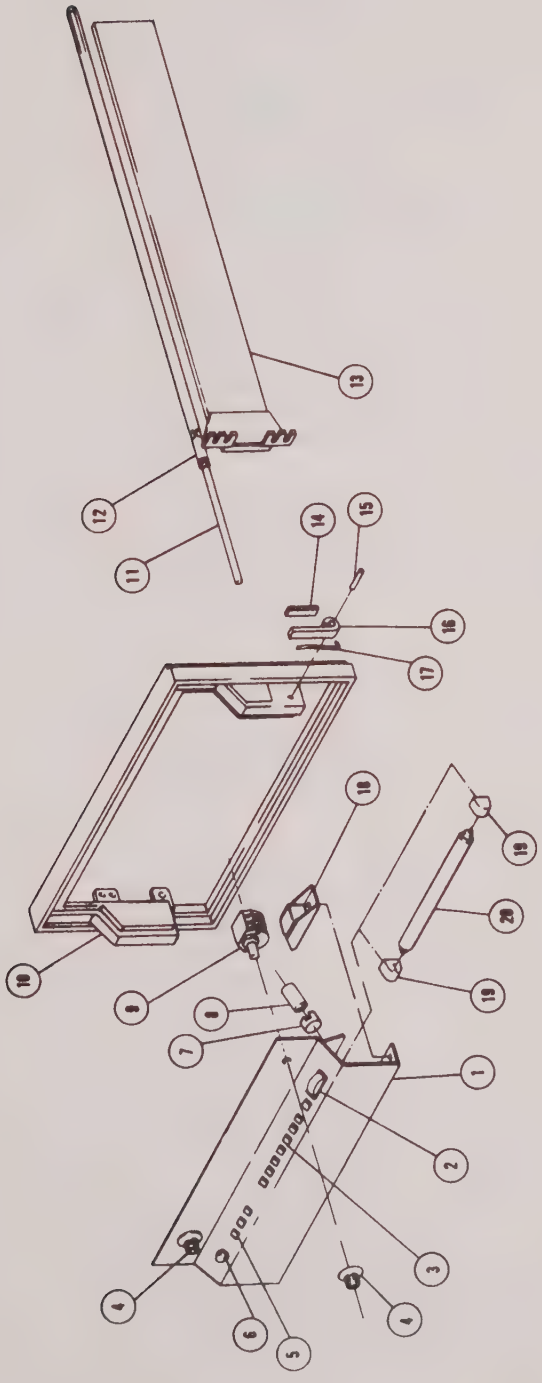

FIGURE 8-7 FRONT PANEL AND FRAME ASM. 2607-60 OSCILLOGRAPH

EXPLODED VIEW PARTS LIST
0000-2607-60 OSCILLOGRAPH INKING SYSTEM
FIGURE 8-8

ITEM NO	PART NUMBER	DESCRIPTION	SYMBOL NO
1	11-2202-00	Kit, Penmotor, 40mm	
2	11-2823-31	Pen Asm., 40mm and 80mm	
	644715	Pen Tube (Part of 2)	
3	845077	Penmotor, 40mm	
4	680294	Replacement Band, 40mm	
5	11-2201-00	Kit, Penmotor, 80mm	
6	442900-915	Penmotor, 80mm	
7	684409	Replacement Band, 80mm	
8	11-2208-00	Kit, 8 Ch. Multimarker	
9	11-2821-20	Pen Asm., Multimarker	
	644728	Pen Tube (Part of 9)	
10	11-2109-80	Multimarker, 8 Ch.	
11	761343	Manifold Asm.	
12	445891	Penmotor Mtg. Bar	
13	847425	Manifold Asm., Complete (see Fig. 8-13)	
14	844817	Bar Asm., 10 Valve	
15	241843	Valve, Nipple	
16	241845	Retainer, Manifold Seal	
17	244673	Cover	
18	744679	Bellows Asm	
19	244658	Housing, Bellows	
20	244678	Bellows, Aneroid	
21	244688	Spring, Helical Comp.	
22	244656	Stem, Valve	
23	244657	Spring	
24	244655	Valve, Check	
25	232780-7	"O" Ring	
26	344660	Body, Valve	
27	232780-2	"O" Ring	
28	847419	Tube Asm., Ink Supply	
29	232780-4	"O" Ring	
30	242421	Support, Manifold	
31	241836	Arm, Manifold	
32	241837	Cap, Manifold End	
33	647388	Bracket, Asm., Mounting	
34	849432	Ink Supply Asm. (See Fig. 8-14)	
35	866010	Motor, A.C., Gearhead	B-703
36	243937	Plate, Mounting	
37	644081	Plate Asm., Mtg., Ink Cyl.	
38	243936	Plate, Mounting	
39	232250-7	Bearing	
40	240161-424	Pin, Straight	

EXPLODED VIEW PARTS LIST
0000-2607-60 OSCILLOGRAPH INKING SYSTEM
FIGURE 8-8 (Continued)

ITEM NO	PART NUMBER	DESCRIPTION	SYMBOL NO
41	243938	Guide, Gear Rack	
42	9-127070-3	Ring, Retaining	
43	243826	Gear, Spur	
44	243828	Gear Rack	
45	644223	Cylinder, Ink	
46	247808	Guide, Pointer	
47	243821	Piston	
48	243807	Pointer	
49	243939	Stud, Continuous Thread	
50	243857	Diaphragm, Valve, Special	
51	243827	Cap, Piston	
52	240707-8204	Screw, Assembled Washer	
53	749433	Chamber Asm.	
54	232780-7	Packing, Preformed	
55	244592	Screw, Cap	

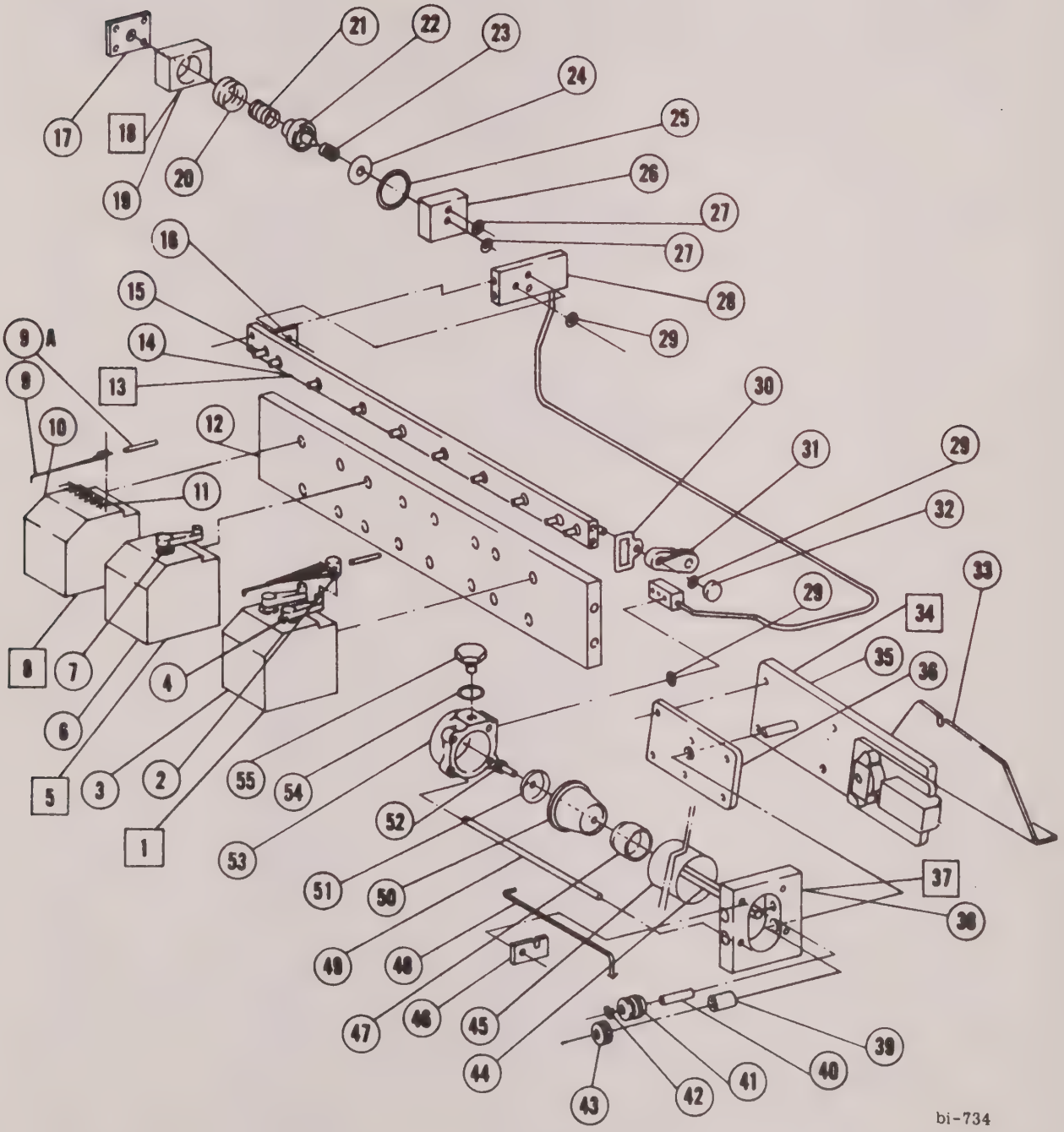

FIGURE 8-8 INKING SYSTEM 2607-60 OSCILLOGRAPH

EXPLODED VIEW PARTS LIST
0000-2607-60 OSCILLOGRAPH CHASSIS ASSEMBLY
FIGURE 8-9

ITEM NO	PART NUMBER	DESCRIPTION	SYMBOL NO
1	848214	Chassis Asm., Note Pad	
2	248851	Guide	
3	248852	Spring	
4	348853	Clip	
5	847429	Plate Asm., Left Side	
6	240077	Block, Spring Retainer	
7	240034	Screw, Special	
8	2-240031-1	Spring, Helical Extension	
9	240033	Screw, Special	
10	240035	Bushing	
11	128418	Cam, Pressure Roll	
12	240078	Spacer	
13	240032	Link, Pressure Roll	
14	229880-910	Bracket Asm., Paper Roll Adj.	
15	130534	Screw, Shoulder	
16	127124	Bracket	
17	244529	Plate, Friction	
18	127956	Plate, Friction	
19	113252	Plate, Friction	
20	232983	Plate, Supporting, Supply Roll	
21	847698-1	Cover Asm., Left Hand	
22	747520	Bracket Asm., Fuse Mounting	
23	647761	Bracket	
24	129758	Fuseholder	
25	102625-9	Fuse, Type 3AG	F-701
26	116198-8	Fuse, Slo-blo	F-702
27	121047	Connector	J-701
28	265814-10	Board, Terminal	TB-702
29	747398	Bracket Asm, Terminal Strip Mtg.	
30	447385	Bar, Rear Cover Mtg., Bottom	
31	749651	Bar Asm.,	
32	347396	Bar, Spacer	
33	847880	Bracket, Elec. Comp. Mtg.	
34	747530	Bracket Subasm.	
35	341681-910	Component Asm.	
36	241679-910	Component Board	
37	5-115557-821	Resistor	
38	5-115557-221	Resistor	R-722,R-724
39	232253	Semiconductor	CR-702
40	5-115557-331	Resistor	R-721

EXPLODED VIEW PARTS LIST
0000-2607-60 OSCILLOGRAPH CHASSIS ASSEMBLY
FIGURE 8-9 (Continued)

ITEM NO	PART NUMBER	DESCRIPTION	SYMBOL NO
41	5-115558-561	Resistor	R-720
42	330112	Transformer	T-701
43	129451	Relay, 28 volt	K-701
44	128041	Socket, Relay	
45	341987	Bracket, Diode Mtg.	
46	128020-507	Capacitor, Fixed, Dry Elec.	C-702
47	129066	Rectifier, Silicone	CR-701,CR-702
48	242186-910	Arm Asm., Sensing	
49	241769	Spring	
50	16-211473-102	Resistor, Variable	R-725
51	19-211473-102	Resistor, Variable	R-726
52	448228	Table, Viewing	
53	747541	Bar, Writing	
54	347380	Bar, Rear Cover Mtg. Top	
55	447832	Rear Cover	
56	845394	Arm Asm., Paper Drag	
57	345386	Arm, Paper Drag	
57A	245383	Pad (not shown)	
58	127050	Shaft, Weight	
59	3-227070-6	Ring, Retaining, External	
60	245385	Bracket, Supply Brake	
61	247387	Bar, Weight Mtg.	
62	245387	Spring	
63	341935-915	3 Position Event Marker	A-703, A-704
64	11-2821-20	Pen Asm., Event Marker	
65	444894	Mounting Bar, Event Marker	
66	227118	Paper Tension Roll	
67	332984-910	Paper Supply Shaft Asm.	
68	232982	Shaft, Supply Roll	
69	242102-910	Hub Asm., Supply Roll, Disk	
70	127971-910	Hub Asm., Roller	
71	128721	Bearing, Flanged, Drive Roll	
72	340270-910	Drive Roll Asm.	
73	129638	Switch Asm, Table Interlock	
74	847427	Plate, Side, R.H.	
75	1-210761-1	Bearing, Tension Roller	
76	127115	Bearing Cap	
77	242722	Bracket Wrench	
78	847697-1	Cover, Side, R.H.	
79	248238	Pressure Release Handle	
80	340037-910	Pressure Roll Asm.	

EXPLODED VIEW PARTS LIST
0000-2607-60 OSCILLOGRAPH CHASSIS ASSEMBLY
FIGURE 8-9 (Continued)

ITEM NO	PART NUMBER	DESCRIPTION	SYMBOL NO
81	340036	Shaft, Pressure Roll	
82	227057-910	Bearing Asm., Pressure Roll	
83	127940-2	Ring	
84	240302	Sleeve, Pressure Roll	
85	847392	Plate Asm., Bottom	
86	11-2101-40	Timer Asm.	A-702
87	747460	Bracket Asm.	
88	265814-10	Board, Terminal	P/O TB-703
89	265814-10	Board, Terminal	P/O TB-703
90	647464	Motor Asm	B-701
91	127091	Block, Motor Mtg.	
92	232228	Plate, Motor Mtg.	
93	127912	Coupling, Universal	
94	123695	Core, Coupling	
95	127913	Coupling, Universal	
96	245384	Bracket	
97	127911	Post, Mounting	
†98	747466	Transmission Asm., Complete (Use Item 99 and 99A)	
99	RC 2140-16	Transmission (RC2140-16)	A-701
99A	232241	Gear, Pinion	
100	232247-910	Plate Asm., Bearing Ret.	
101	232243	Gear, Spur	
102	240508	Gear, Shaft, Spur	
103	232260-910	Gear Asm., Idler	
104	232240	Spacer	
105	847559-1	Paper Chute, Upper	
106	847558-1	Paper Chute, Lower	
107	347359	Spacer Bar, Motor Mount	
108	347360	Spacer Bar, Motor Mount	
109	647443	Capacitor Asm., Motor	C-701
110	240231-910	Strap, Capacitor	
111	747468	Switch, Chart Interlock	S-706

† Not procurable.

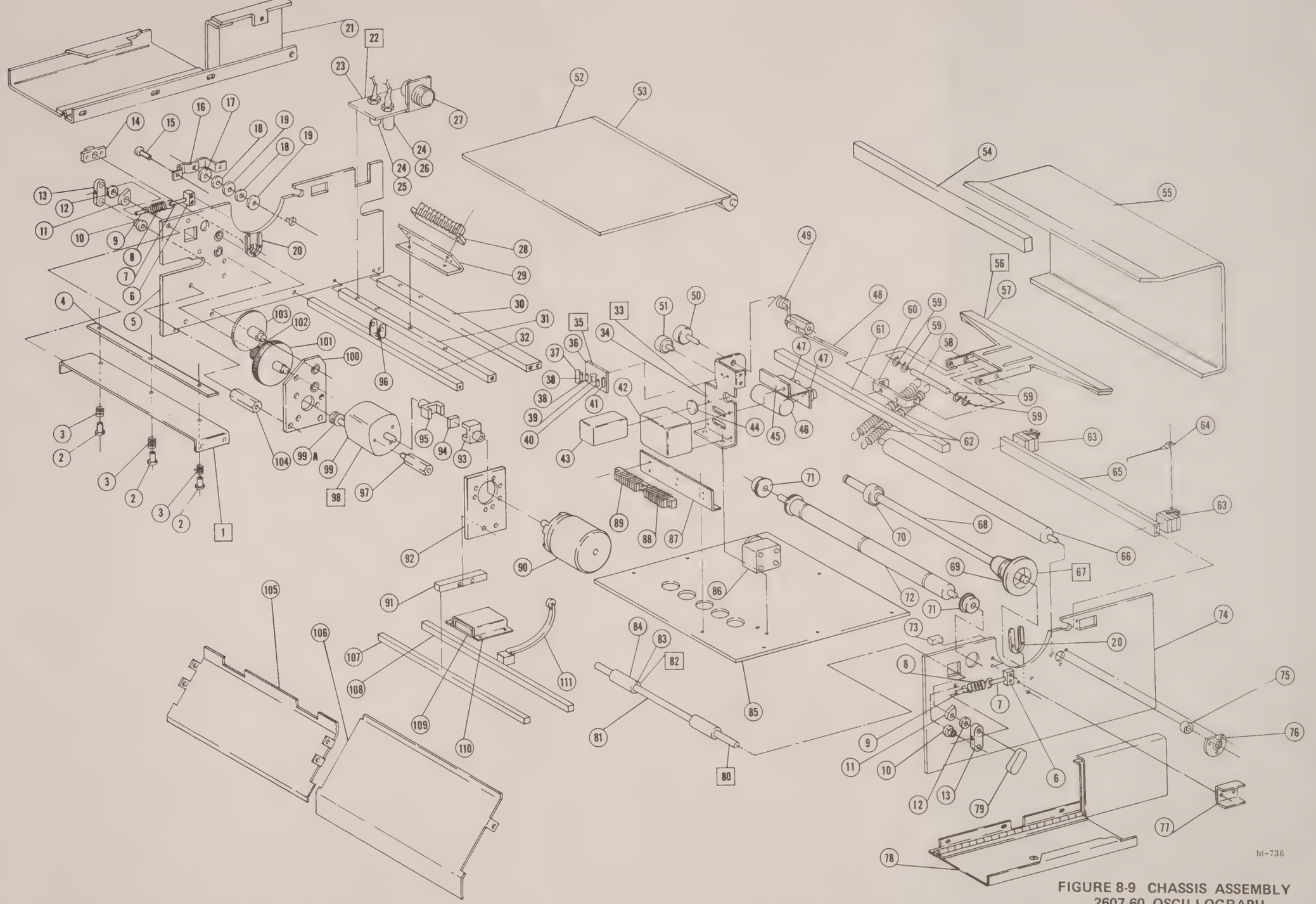

FIGURE 8-9 CHASSIS ASSEMBLY
2607-60 OSCILLOGRAPH

EXPLODED VIEW PARTS LIST
0000-2607-70 OSCILLOGRAPH CONTROL PANEL ASM
FIGURE 8-10

ITEM NO	SYMBOL NUMBER	PART NUMBER	DESCRIPTION
1		848210	Control Panel
2	M-701	248361	Ammeter, D.C.
3	DS-701	1-241774-8	Lamp
4		248808	Clip Speed
5	XDS-701	248809	Socket, Molded
6		246343-6	Clip, Spring Tension
7	DS-702	232136	Lamp, Florescent
8	XDS-702A	247917	Connector, Elec.
9		848068	Hood Asm.
10		243894	Screw, Captive
11		748016	Panel Asm., Front Top
12		447978	Support, Hinge
13		241367	Bolt, Shouldered
14		241368	Spacer, Bearing
15	S-701 S-702 S-703	347834	Switch, Pushbutton, 11 Pos.
16		246552-1	Pushbutton
17	XDS-702B	247917	Connector, Elec.

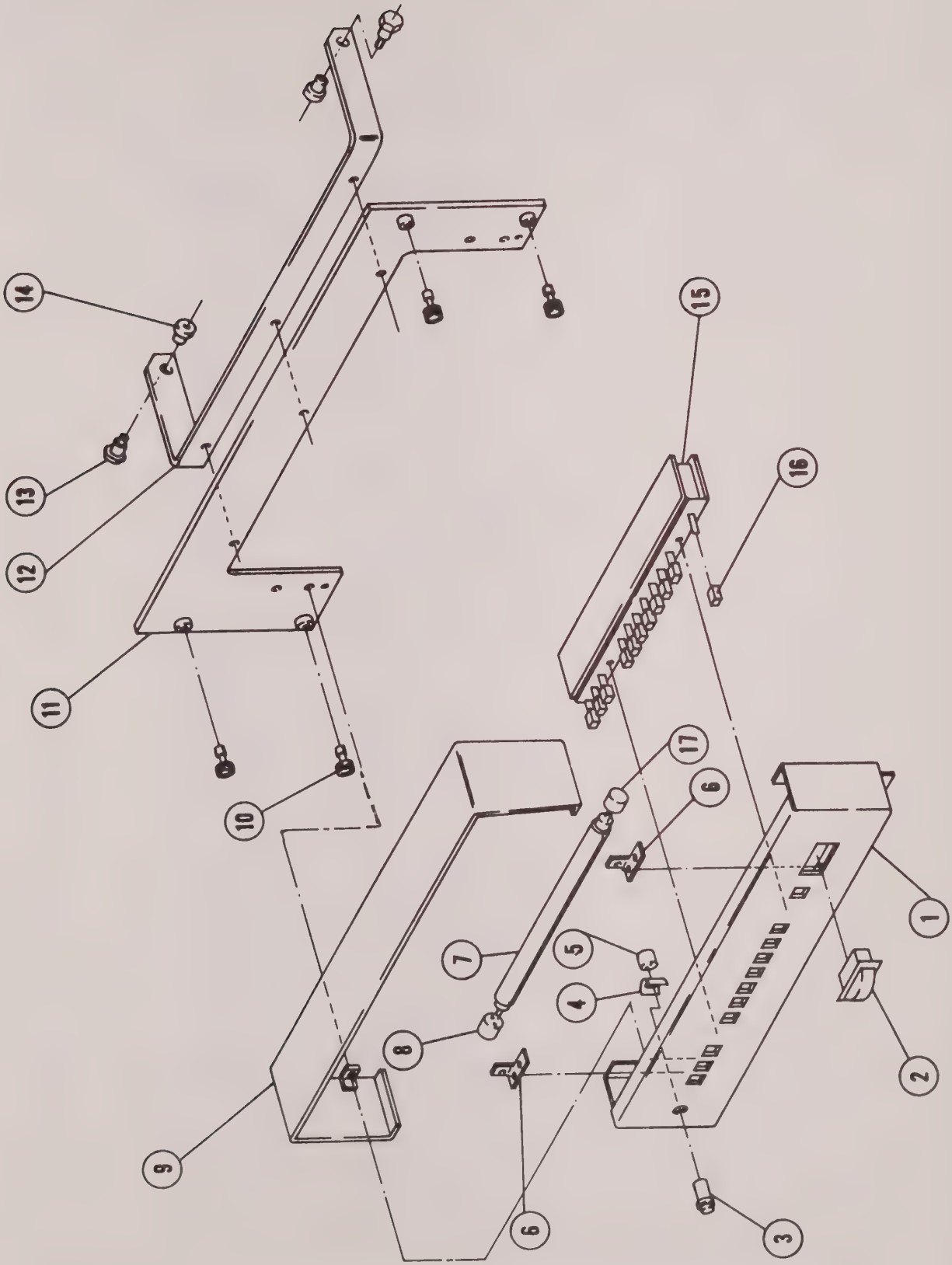

FIGURE 8-10 CONTROL PANEL ASM 2607-70 OSCILLOGRAPH

EXPLODED VIEW PARTS LIST
0000-2607-70 OSCILLOGRAPH
FIGURE 8-11 (1 of 3)

ITEM NO	PART NUMBER	DESCRIPTION	SYMBOL NO
1	744801	Bezel Asm., Bottom	
2	342627-210	Switch Asm.	
3	342627-910	Switch	S-705
4	242626-910	Actuator Asm.	
5	241905	Actuator	
6	241832	Spacer	
7	241833	Roller	
8	242625	Bracket Asm.	
9	242621	Bracket, Angle	
10	242624	Catch	
11	242622	Spring	
12	242623	Pin	
13	342181-910	Bar Sub Assy, Writing	
14	341300	Bar, Writing (Part of 13)	
15	129394	Retainer, Bearing	
16	341450	Arm, (Part of 13)	
17	127875	Bearing	
18	341385	Roller, Paper Tension	
†19	241455-910	Arm Assy	
	341451	Arm	
	241449	Pin	
20	242296	Spacer	
21	127956	Plate, Friction	
22	1-216741-425	Lockwasher, No. 8	
23	31-119998-82	Nut, Hex., No. 8-32	
24	113252	Plate, Friction	
25	131796	Spring, Friction, Plate	
26	20-119922-8218	Screw, Cap, No. 8-32	
27	31-119922-8212	Screw, Cap, No. 8-32	
28	348045	Bezel Asm., Upper Left	
29	348043	Bezel Asm., Upper Right	
30	246840	Block, Tapped	
31	127933	Spring, Tension Roller	
32	246841	Guide, Spring	
33	446843	Bracket L.H.	
34	347992	Plate, Support	
35	341772	Bracket, Angle	
36	16-211473-102	Resistor, Variable	R-725
37	241769	Spring	
38	242186-910	Arm Asm, Sensing	
39	241771	Bushing	
40	241770	Arm Sensing	

† Not Procurable.

EXPLODED VIEW PARTS LIST (Continued)
0000-2607-70 OSCILLOGRAPH
FIGURE 8-11 (1 of 3)

ITEM NO	PART NUMBER	DESCRIPTION	SYMBOL NO
41	242183	Pad, Felt	
42	243049-910	Guide Asm, Paper	
43	332080	Chute, Paper	
44	242646-910	Bracket, Subasm.	
45	242645	Bracket	
46	1-123349-31	Ring, Retaining	
47	242648	Spring	
48	242647	Shaft	
49	243209-910	Arm Asm, Paper Drag	
50	448371-1	Slide, Rack, Right + Left	
51	446844	Bracket, Right	
52	748019	Pressure Roll Asm.	
53	1-2270940-7	Ring, Retaining	
54	131827	Washer	
55	232250-1	Bearing	
56	241873	Sleeve, Molded	
57	346868	Shaft, Pressure	
58	448048	Panel, Front	
59	246388	Cover, Panel	
60	341897	Paper Chute	
61	247985	Strip, Tapped	
62	447986	Bracket, Panel Mtg.	
63	647975	Panel Asm., Bottom Front	
64	243894	Panel Screw, Captive	

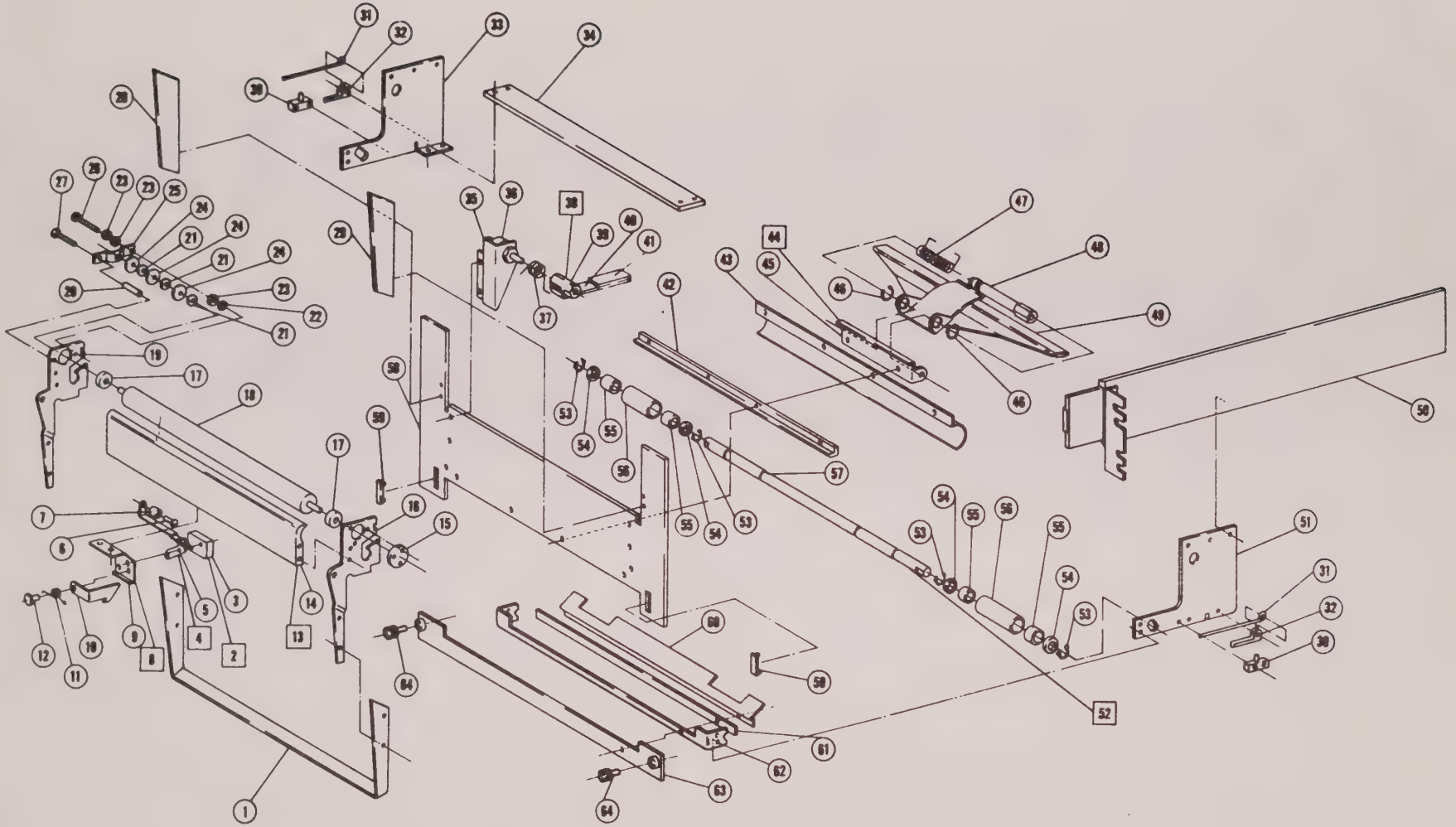

FIGURE 8-11 OSCILLOGRAPH 0000-2607-70 (Sheet 1 of 3)

EXPLODED VIEW PARTS LIST
0000-2607-70 OSCILLOGRAPH
FIGURE 8-11 (2 of 3)

ITEM NO	PART NUMBER	DESCRIPTION	SYMBOL NO
1	241842	Actuating Arm	
2	241841	Guide, Actuating Arm	
3	123108-22	Grommet	
4	241840	Support, Spring	
5	241839	Spring, Actuating Arm	
6	241837	Cap, Manifold End	
7	232780-4	Packing, Preformed	
8	242421	Support, Manifold	
9	241836	Arm, Manifold	
10	241838	Bolt, Shouldered	
11	744679	Bellows Asm.	
12	244658	Housing, Bellows	
13	344660	Body, Valve	
14	244688	Spring	
15	244656	Stem, Valve	
16	244657	Spring	
17	244655	Valve, Check	
18	344593	Insert	
19	244638	Housing, Bellows	
20	232780-2	Packing, Preformed	
21	848157	Manifold Asm., Complete (See Fig. 8-13)	
22	241845	Retainer Seal, Manifold	
23	232780-4	Packing,Preformed	
24	845706	Manifold Asm., Complete	
25	232780-2	Packing, Preformed	
26	648077	Plate Asm., Shelf	
27	444724	Bracket, Mounting	
28	848137	Ink Supply Asm. (See Fig. 8-14)	
29	866010	Motor, A.C., Gearhead	B-2
30	243937	Plate, Mounting	
31	644081	Plate Asm., Ink Cyl. Mtg.	
32	243936	Plate, Ink Cyl. Mtg.	
33	232250-7	Bearing	
34	4-112468-19	Pin, Roll	
35	243938	Rack, Guide	
36	9-227070-3	Ring, Retainer	
37	243826	Gear, Spur	
38	247808	Guide, Pointer	
39	247807	Pointer	
40	243828	Rack, Gear	

EXPLODED VIEW PARTS LIST (Continued)
0000-2607-70 OSCILLOGRAPH
FIGURE 8-11 (2 of 3)

ITEM NO	PART NUMBER	DESCRIPTION	SYMBOL NO
41	243821	Piston	
42	243857	Diaphragm	
43	243939	Stud, Continuous Thread	
44	243827	Cap, Piston	
45	240707-8204	Screw, Assembled Washer	
46	644223	Cylinder Asm.	
47	244592	Screw, Cap	
48	232780-7	Packing, Preformed	
49	748136	Chamber Asm.	
50	129451	Relay, 28 VDC	K-701
51	121047	Connector, Male, 19 Pring	J-701
52	330112	Transformer, Power	T-701
53	128041	Socket, Relay	XK-701
54	129066	Rectifier, Silicon	CR-701
55	129066	Rectifier, Silicon	CR-702
56	128020-507	Capacitor, Fixed	C-702
57	341987	Bracket, Diode Mtg.	
58	104099-3	Terminal, Strip	
59	105960	Terminal, Strip	
60	242342	Bushing, Paper Guide Shaft	
61	448146	Plate, Top L.H.	
62	11-2101-40	Timer Asm., Internal	A-702
63	666190	Cover, Electrical	
64	231962	Ballast, Lamp	
65	341681-910	Component Asm.	
66	265814-10	Board, Terminal	TB-702
67	5-115558-561	Resistor, Fixed	R-720
68	5-115557-331	Resistor, Fixed	R-721
69	5-115557-221	Resistor, Fixed	R-724
70	5-115557-821	Resistor, Fixed	R-723
71	5-115557-221	Resistor, Fixed	R-722
72	232253	Semiconductor	CR-720
73	241679-910	Terminal Board Asm.	
74	248350	Bracket Asm.	
75	19-211473-102	Resistor, Variable	R-726
76	448147	Plate, Top, R.H.	
77	445891	Penmotor, Mtg. Bar	
77A	761343	Manifold Asm	
78	11-2201-00	Kit, Penmotor, 80mm	
78A	644728	Pen Tube (Part of 83)	
79	11-2823-31	Pen Asm, 80mm	
79A	644715	Pen Tube (Part of 79)	
80	442900-915	Penmotor, 80mm	

EXPLODED VIEW PARTS LIST (Continued)
0000-2607-70 OSCILLOGRAPH
FIGURE 8-11 (2 of 3)

ITEM NO	PART NUMBER	DESCRIPTION	SYMBOL NO
81	684409	Replacement Band, 80mm	
82	11-2208-00	Kit, 8 Ch. Multimarker	
83	11-2821-21	Pen Asm., Multimarker	
84	844858	Multimarker, 8 Ch.	
85	11-2202-00	Kit, Penmotor, 40mm	
86	11-2823-31	Pen Asm., 40mm	
87	845077	Penmotor, 40mm	
88	680294	Replacement Band, 40mm	
89	748067	Plate Asm., Back	
90	341935-915	Event Marker Asm. (RA2103-90)	A-703
91	444894	Event Marker Bar Asm.	
92	RA2821-20	Pen Asm., Event Marker	
93	341935-915	Event Marker Asm. (RA2103-90)	A-704
94	241538	Shaft, Paper Guide	
95	130168	Connector, Event Marker	J-709
96	346091	Mtg. Bar	
97	130168	Connector, Event Marker	J-710

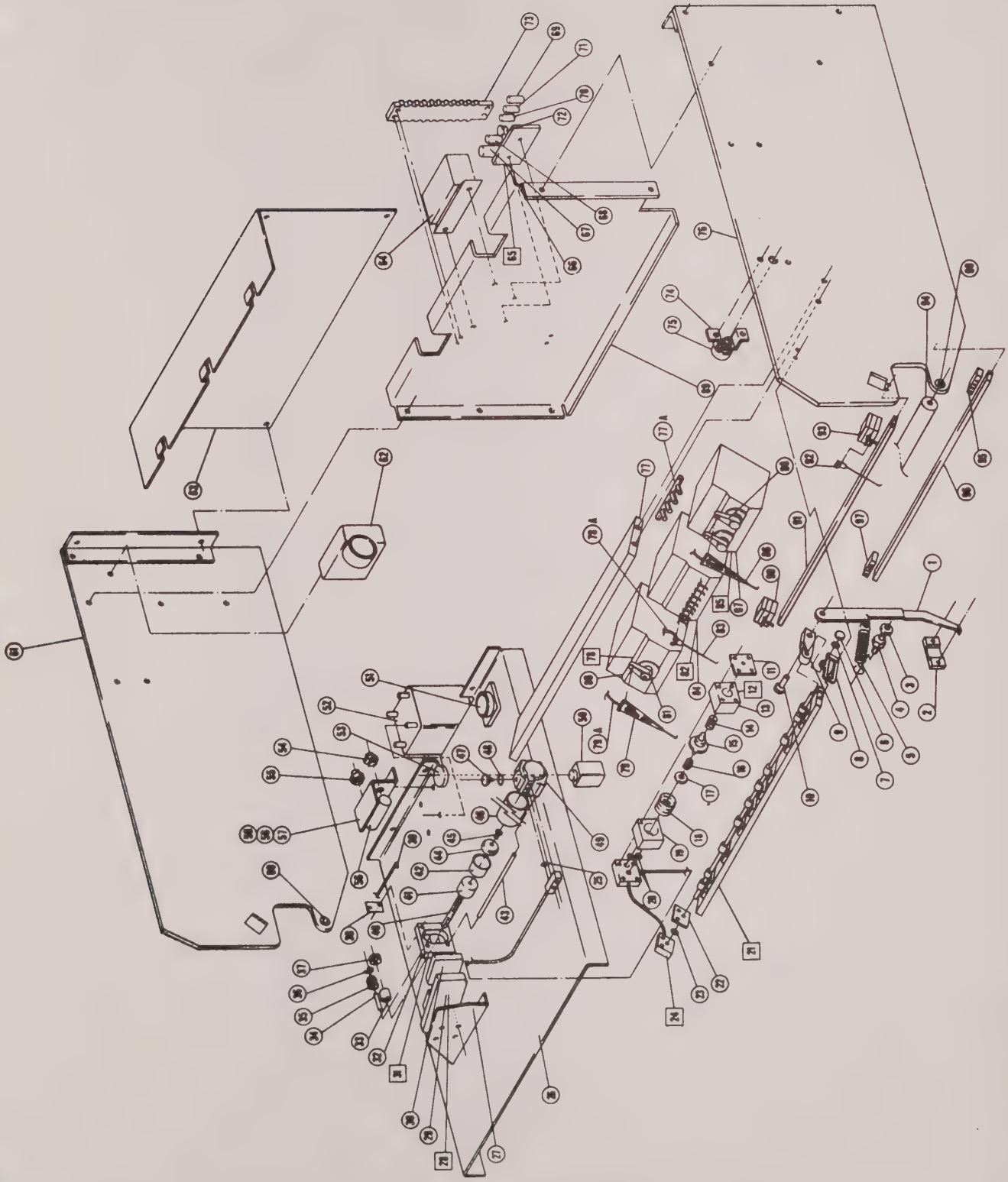

FIGURE 8-11 OSCILLOGRAPH 0000-2607-70 (Sheet 2 of 3)

EXPLODED VIEW PARTS LIST
0000-2607-70 OSCILLOGRAPH
FIGURE 8-11 (3 of 3)

ITEM NO	PART NUMBER	DESCRIPTION	SYMBOL NO
1	131825	Shaft, Paper Guide	
2	128721	Bearing, Flanged	
3	341087-910	Roller Asm., Drive	
4	647949	Housing Asm., Mech. Drive	
5	240731-5	Ring, Retaining	
6	241708	Housing, Mech. Drive	
7	232250-3	Bearing, Roller, Needle	
8	232250-5	Bearing, Roller, Needle	
9	241709	Gearshaft, Spur	
10	241707	Gearshaft, Spur	
11	131825	Shaft, Paper Guide	
12	131829	Plate, Support	
13	247950	Plate Retaining	
14	647954	Pulley Asm.	
15	242051-2	Belt, Timing	
16	247943	Plate, Nut	
17	647988	Plate Asm., L.H., Bottom	
18	342167-910	Shaft Asm., Supply Roll	
19	242102-910	Hub Asm., Supply Roll	
20	232982	Shaft, Supply Roll	
21	127940-7	Ring, Retaining	
22	127971-910	Hub Asm., Roller	
23	128117-10	Board, Terminal	TB-703
24	128541	Bracket, Footed	
25	127852	Capacitor, Fixed	C-701
26	343122-910	Plate Asm., Back	
27	242723-910	Tool Asm., Spanner	
28	242722	Support, Spanner Tool	
29	649834	Stop Asm., Drawer	
30	647957	Spacer Asm.	
31	441716	Plate, Side, R.H. Bottom	
32	442454-910	Drive Asm.	
33	317713-2	Motor, Sync.	B-701
34	127915	Spacer	
35	127912	Coupling, Universal	
36	123695	Core, Coupling	
37	127913	Coupling	
38	242044	Collar, Locking	
39	242061-910	Pulley Asm., Transmission	
40	RC-2140-16	Transmission Asm.	A-701
41	127911	Post, Transmission Mounting	
42	341867	Plate, Motor Mount	
43	127091	Block, Motor Mount	

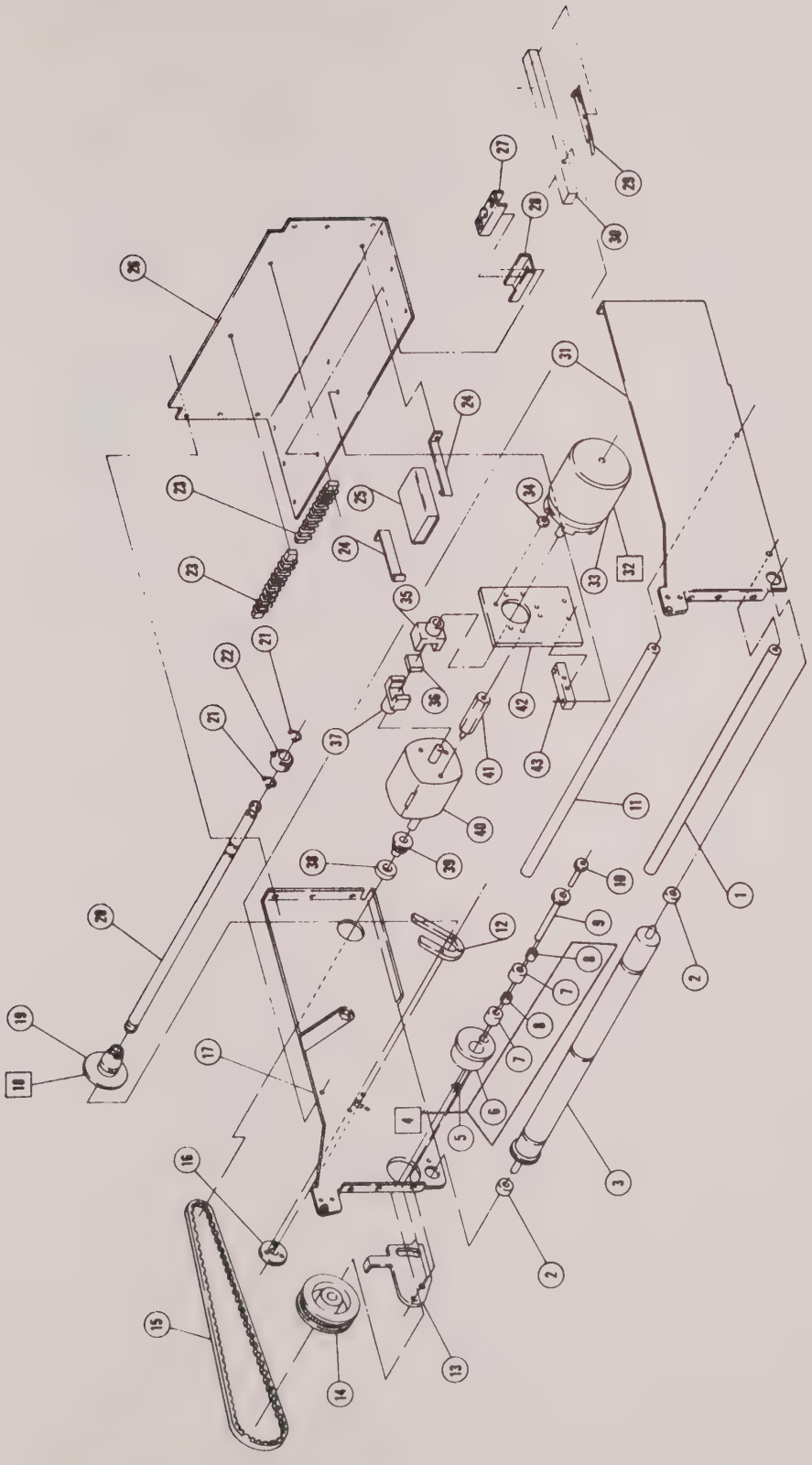

FIGURE 8-11 OSCILLOGRAPH 0000-2607-70 (Sheet 3 of 3)

EXPLODED VIEW PARTS LIST
0000-2607-70 OSCILLOGRAPH FUSE PANEL ASM 748153
FIGURE 8-12

ITEM NO	PART NUMBER	DESCRIPTION	SYMBOL NO
1	748153	Panel Asm., Fuse	
2	648308	Knob Asm.	
3	648026	Bracket Asm., Angle	
4	447940	Switch, Rotary	S-707
5	102625-9	Fuse, 3 Amp.	F-701
6	116198-8	Fuse, Slo-Blo, .5 Amp.	F-702
7	119365	Holder, Fuse	SF-701
8	119365	Holder, Fuse	XF-702
9	648024	Bracket Asm., Socket Mtg.	
10	231964	Starter Flourescent Lamp	S-711
11	231965	Socket, Lamp Starter	XS-711
12	447940	Switch, Rotary	S-708

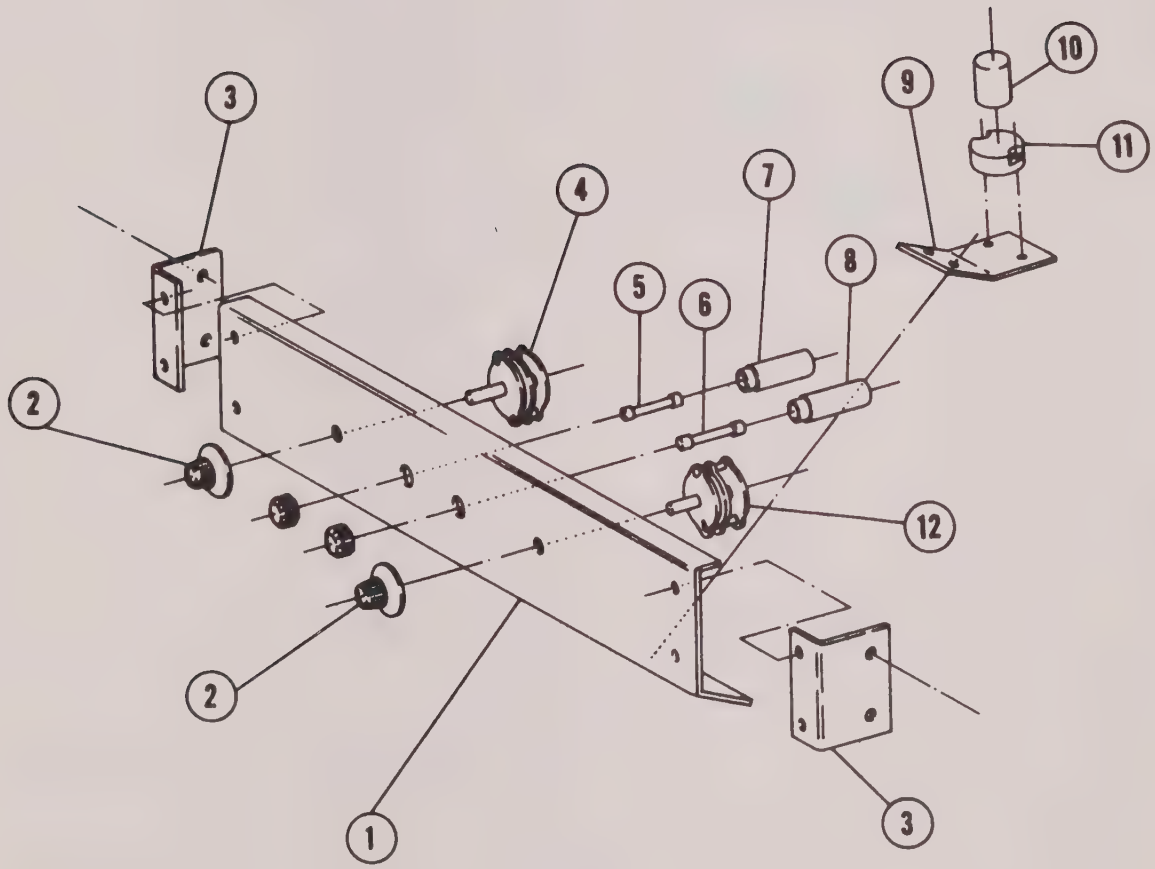

FIGURE 8-12 FUSE PANEL ASM 748153 (2607-70 OSCILLOGRAPH)

EXPLODED VIEW PARTS LIST
MANIFOLD ASSEMBLY, OSCILLOGRAPH
FIGURE 8-13

Item No.	Part Number	Description
1	232780-4	"O" Ring
2	1-216741-420	Lockwasher
3	20-119922-6205	Screw, Cap.
4	844817	Manifold Assembly
5	31-119918-4005	Screw
6	1-216741-411	Lockwasher
7	241845	Retainer, Seal
8	232780-1	"O" Ring
9	845706	Tube Assy (2607-70)
9	847419	Tube Assy (2607-60)
10	666895	Valve Assy
11	1-216741-402	Lockwasher
12	31-119914-2610	Screw
13	1-216741-411	Lockwasher
14	31-119918-4006	Screw
15	31-119918-4008	*Screw
16	1-216741-411	*Lockwasher
17	232780-4	*"O" Ring
18	241843	Nipple, Valve
19	241836	Arm, Manifold
20	242421	Support, Manifold
21	241837	Cap, End, Manifold

***Not included as part of Manifold Assembly.**

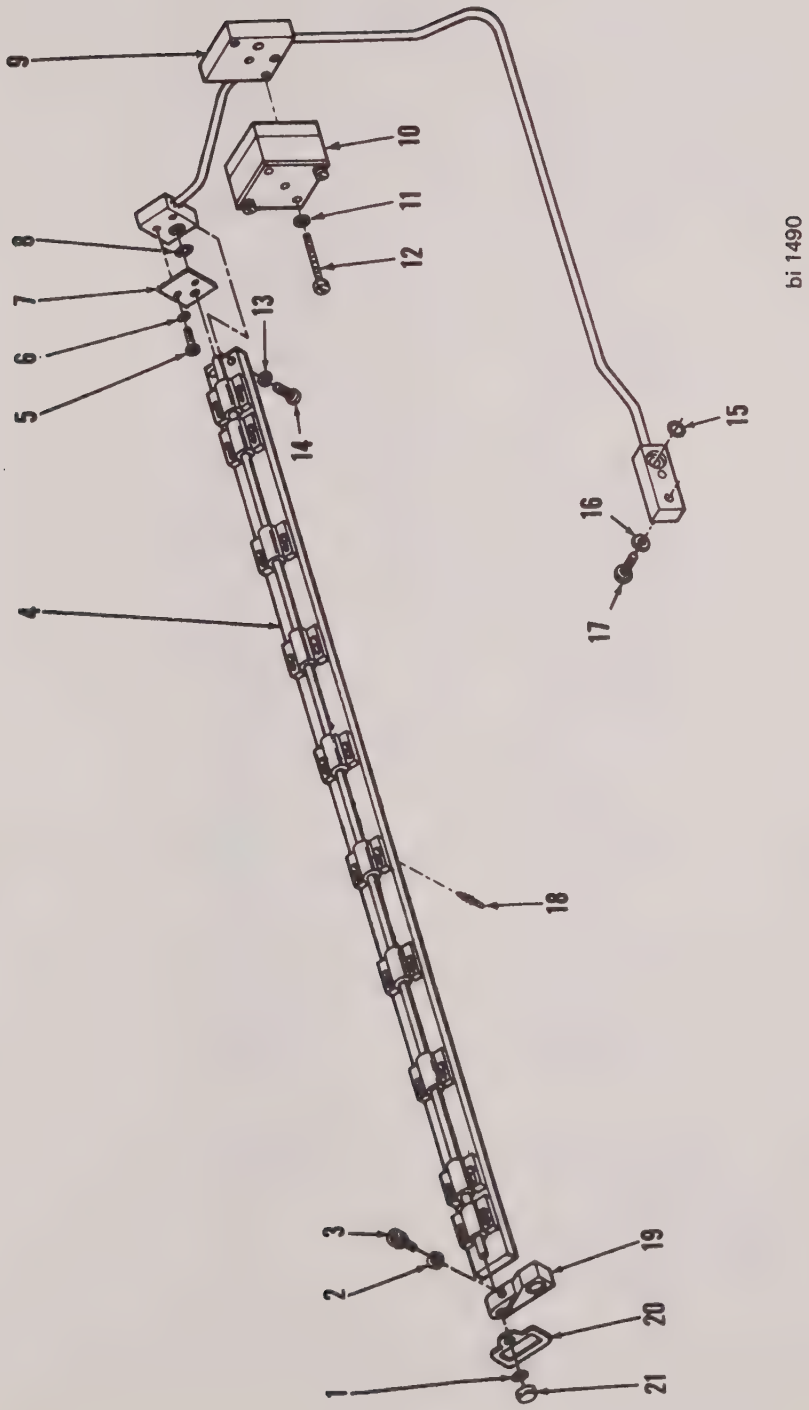

FIGURE 8-13 OSCILLOGRAPH MANIFOLD ASSEMBLY

EXPLODED VIEW PARTS LIST
INK SUPPLY ASSEMBLY, OSCILLOGRAPH
FIGURE 8-14

Item No.	Part Number	Description
1	866010	Motor, A.C., Gear Head
2	31-119920-0206	Screw, Mach., Flat Hd.
3	243937	Plate, Mounting
4	1-216741-425	Washer, Lock Spring
5	31-119920-0206	Screw, Mach., Flat Hd.
6	1-216741-420	Washer, Lock
7	31-119998-62	Nut, Hex
8	247807	Pointer
9	1-118195-305	Washer,Plain
10	247808	Guide, Pointer
11	243936	Plate
12	4-112468-19	Pin, Roll
13	243826	Gear, Spur
14	232250-7	Bearing, Roller
15	9-227070-3	Ring, Retaining
16	243938	Guide, Gear Rack
17	240161-424	Pin, Straight
18	644223	Cylinder Asm., Ink
19	243828	Gear, Rack
20	14-119923-6202	Setscrew
21	243821	Piston
22	243857	Diaphragm
23	243827	Cap, Piston
24	240707-8204	Screw
25	244220	Spring
26	444213	Chamber, Ink
27	244109	Valve
28	344593	Insert
29	232780-7	Packing, Preformed
30	244592	Screw, Cap
31	31-119923-6023	Setscrew
32	243939	Stud, Threaded
33	748136	Chamber Asm, Ink (for 2607-70, items 25,26,27,28)
33	749433	Chamber Asm, Ink (for 2607-60, items 25,26,27,28)

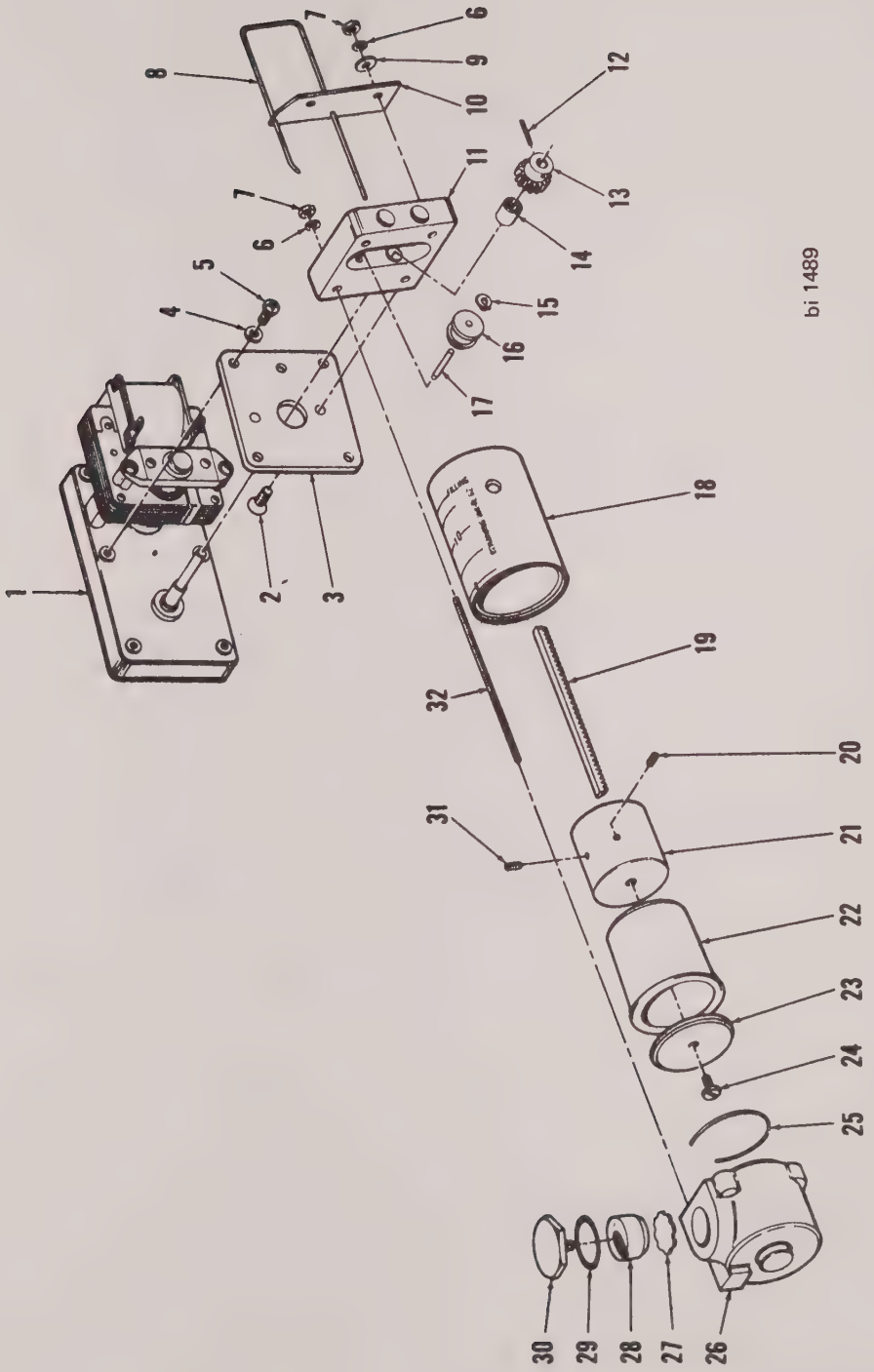

FIGURE 8-14 OSCILLOGRAPH INK SUPPLY ASSEMBLY

EXPLODED VIEW PARTS LIST
0000-5540-00 DRIVE ASSEMBLY FRAME ASM 847825
FIGURE 8-15

ITEM NO	PART NUMBER	DESCRIPTION	SYMBOL NO
1	443532-910	Frame Subasm., Elec. Equip.	
2	441698	Bracket, Double Angle	
3	129664	Fastener	
4	443524	Side Plate, L.H.	
5	665408	Hanger Asm., Support, L.H.	
6	443666-910	Panel Asm., Front	
7	341706	Bracket Angle, R.H.	
8	341705	Bracket Angle, L.H.	
9	443526	Plate, Back	
10		Reserved	
11	265814-9	Board, Terminal	TB-181
12	643713-10	Angle Asm.	
13	265814-9	Board, Terminal	TB-182
14	243550	Spacer, Threaded	
15	232660-7	Clamp, Cable	
16	663859	Pin, Shoulder, Headless	
17	265814-9	Board, Terminal	TB-183
18	265814-4	Board, Terminal	TB-185
19	265814-9	Board, Terminal	TB-184
20	265814-4	Board, Terminal	TB-186
21	443525	Side Plate, R.H.	
22	847830	Support Asm., Relay & Connector	
23	0-247923-15	Connector, Receptacle	J-196
24	0-247923-15	Connector, Receptacle	J-195
25	665406	Hanger Asm., Support R.H.	

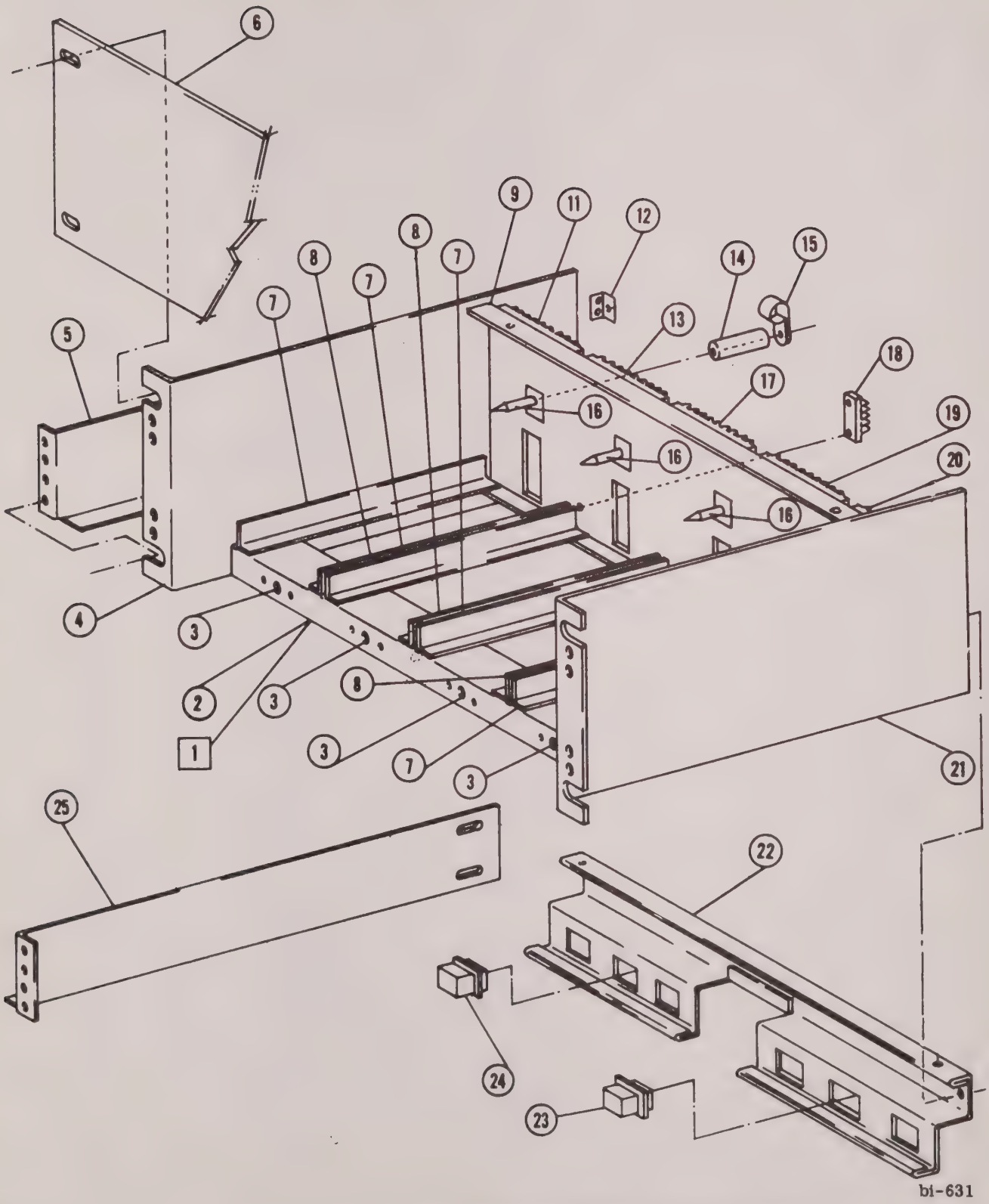

FIGURE 8-15 FRAME ASM 847825 (5540-00 DRIVE ASSEMBLY)

EXPLODED VIEW PARTS LIST
DRIVE AMPLIFIER ASM., MODELS 15-5221-11, -21
FIGURE 8-16

ITEM NO	PART NUMBER	DESCRIPTION	SYMBOL NO
1	848158	Power supply asm.	
2	664275	Plate Asm.	
3	243675	Handle	
4	242981	Retainer, Fastener	
5	243710	Fastener, Stud	
6	242034	Bracket, Angle	
7	342875-910	Transformer Asm.	T-1
8	647982	Bracket, Resistor Mtg.	
9	5-115557-105	Resistor, Fixed (Model 15-5221-11 only)	R-14
10	243380-502	Resistor, Variable	R-7
11	243380-502	Resistor, Variable	R-6
12	243379-503	Resistor, Variable	R-10
13	243379-503	Resistor, Variable	R-11
14	5-115559-222	Resistor, Fixed (Model 15-5221-21 only)	R-14
15	243379-503	Resistor, Variable	R-13
16	243379-503	Resistor, Variable	R-12
17	243380-502	Resistor, Variable	R-9
18	243380-502	Resistor, Variable	R-8
19	102625-7	Fuse, 1 amp, "3AG"	F-2
20	102625-7	Fuse, 1 amp, "3AG"	F-1
21	342874-910	Inducator Asm.	L-1
22	442707-910	Nut Asm.	
23	342703	Support, Transformer	
24	442705	Support, Component	
25	1-108463-20	Eyelet	
26	242640	Semiconductor	CR-2
27	242640	Semiconductor	CR-1
28	232432	Lug	
29	247552	Capacitor, Electrolytic	C-1
30	113876-2	Clamp	
31	123253-201	Spacer	
32	343140-910	Plate Asm., L.H.	
33	442785-910	Plate Subasm., L.H.	
34	127942-302	Spacer	
35	123253-401	Spacer	
36	243077-4	Transistor	Q-8
37	5-242300-1R5	Resistor	R-4
38	243077-4	Transistor	Q-9
39	242016	Support, Slide	
40	102625-7	Fuse, 1 amp "3AG"	F-6

EXPLODED VIEW PARTS LIST (Continued)
DRIVE AMPLIFIER ASM., MODELS 15-5221-11, -21
FIGURE 8-16

ITEM NO	PART NUMBER	DESCRIPTION	SYMBOL NO
41	102625-2	Fuse, 1/8 amp "3AG"	F-5
42	668144	Holder, Fuse	
42A	263487	Reactor, Audio Fig. (Model 15-5221-11 only)	L-102
43	243077-4	Transistor	Q-10
44	5-242300-1R5	Resistor	R-5
45	243077-4	Transistor	Q-11
46	248180	Plate, Key	
47	343004-910	Bracket Asm.	
48	243002	Connector	J-1
48A	249165-1	Diode	CR-3, 4, 5, 6
49	240352-103	Capacitor, Fixed	C-3
50	343141-910	Plate Asm., R.H.	
51	442784-910	Plate Subasm., R.H.	
51A	263487	Reactor Audio Fig. (Model 15-5221-11 only)	L-104
52	102625-2	Fuse,1/8 amp 3AG	F-4
53	668144	Holder, Fuse	
54	102625-7	Fuse, 1 amp "3AG"	
55	243077-4	Transistor	Q-4
56	243077-4	Transistor	Q-7
57	748141	Limiter Asm.,(See Fig. 8-17)	
58	848155	Network, Amp. Asm (see Fig. 8-19)	
59	5-242300-1R5	Resistor	R-3
60	5-242300-1R5	Resistor	R-2
61	243077-4	Transistor	Q-5
62	243077-4	Transistor	Q-6
63	243077-4	Transistor	Q-1
64	243077-4	Transistor	Q-2
65	243077-4	Transistor	Q-3
66	5-115559-222	Resistor	R-15
67	245490-501	Resistor, Fixed	R-1
68	113529-5	Clip, Retaining	
69	243037-257	Capacitor, Fixed, Electrolytic	C-2
70	848167	Network, Amplifier Asm. (see Fig. 8-21)	
71	748141	Limiter Asm., See Sep. Dwg.	
72	442822 or 846584	Network, Oscillator Asm., (see Fig 8-18 or Fig. 8-20)	

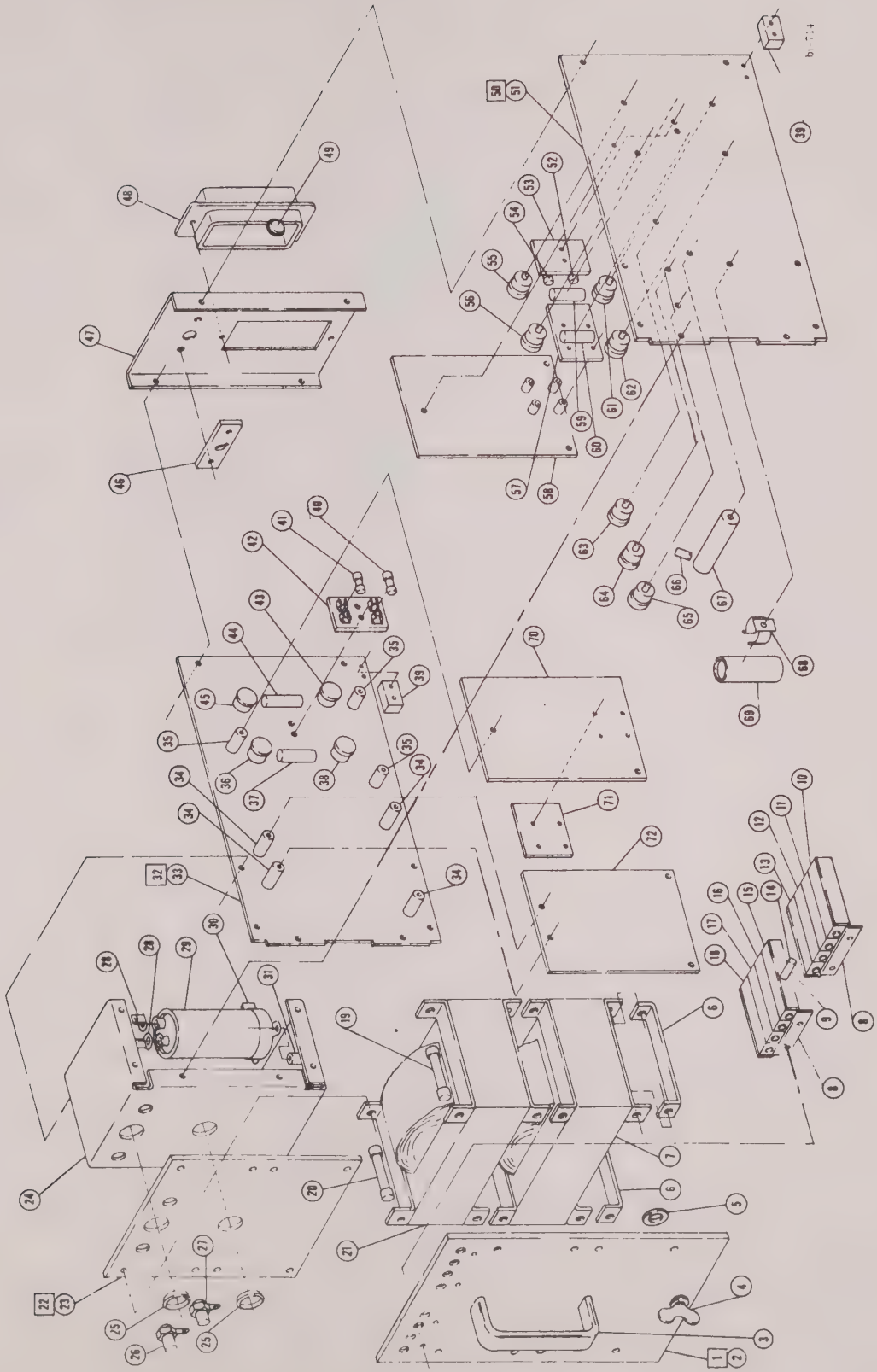

FIGURE 8-16 DRIVE AMPLIFIER ASM., MODELS 15-5221-11, -21

PLAN VIEW PARTS LIST
15-5221-11, -21 DRIVE AMPLIFIER LIMITER ASM 748141
FIGURE 8-17

SYMBOL NO	PART NUMBER	DESCRIPTION
CR-501	244311	Semiconductor, 1N277
CR-502	244896	Semiconductor, 1N458
CR-503	244311	Semiconductor, 1N277
CR-504	244311	Semiconductor, 1N277
CR-505	244896	Semiconductor, 1N458
CR-506	244311	Semiconductor, 1N277
Q-501	242323	Transistor
Q-502	242323	Transistor
R-501	1-128182-91671	Resistor
R-502	1-128182-1103	Resistor
R-505	5-115557-822	Resistor
R-506	5-115557-122	Resistor
R-507	5-115557-472	Resistor
	231978	Pad, Transistor, Mtg.

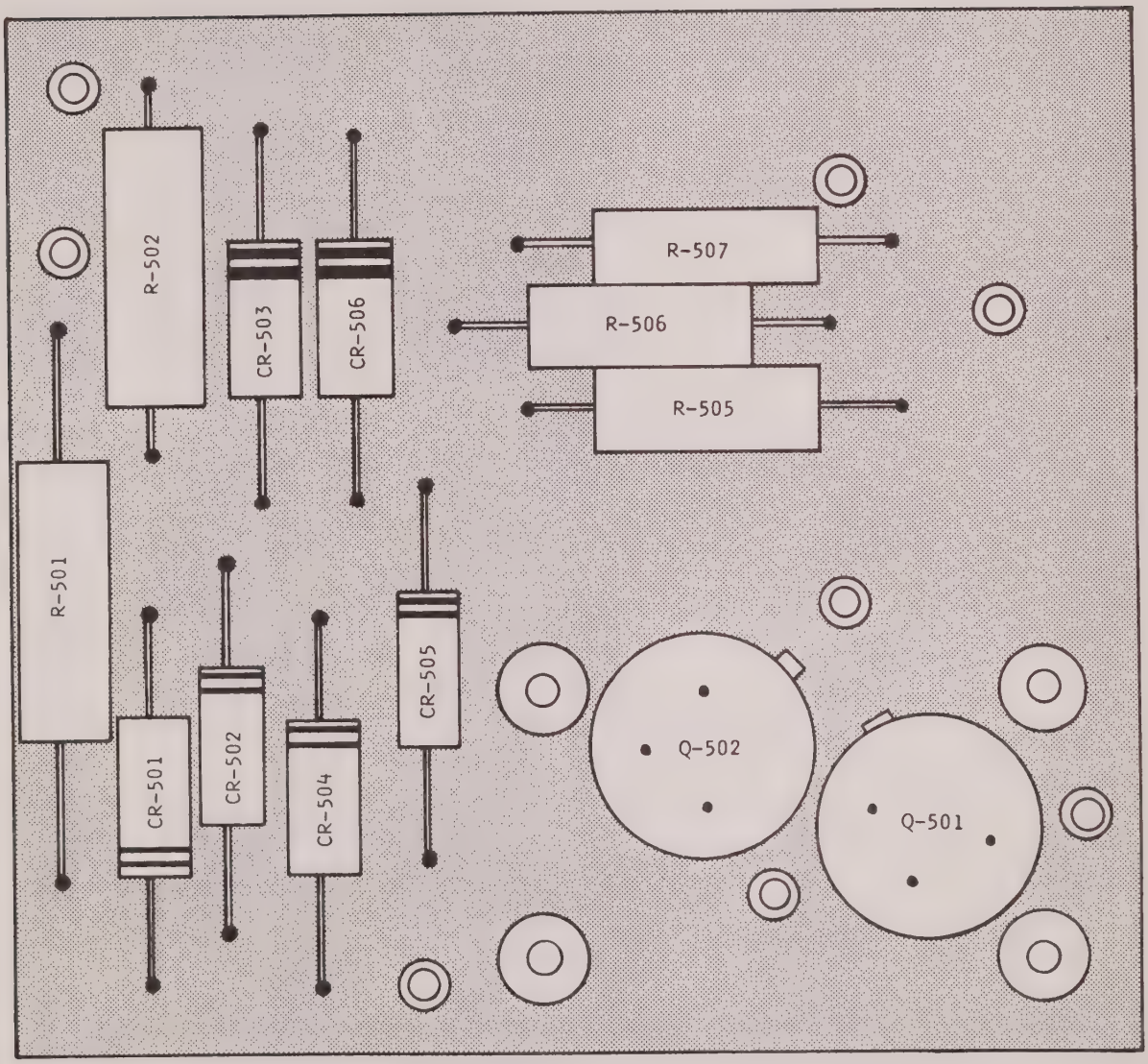

FIGURE 8-17 LIMITER ASSEMBLY 748141

PLAN VIEW PARTS LIST
15-5221-11 DRIVE AMPLIFIER 20KHz OSCILLATOR 442822-910
FIGURE 8-18

SYMBOL NO	PART NUMBER	DESCRIPTION
C-401	243006-356	Capacitor
C-402	231922-107	Capacitor, Fixed
C-403	10-125904-332	Capacitor, Fixed
C-404	10-125904-332	Capacitor, Fixed
C-405	10-125904-154	Capacitor, Fixed
C-406	10-125904-154	Capacitor, Fixed
C-407	243006-356	Capacitor
C-408	10-241145-143	Capacitor, Fixed
CR-401	1-230061-8	Semiconductor
CR-402	130198-1	Semiconductor
CR-403	130198-1	Semiconductor
CR-404	241133	Semiconductor
CR-405	249747	Semiconductor
CR-406	241133	Semiconductor
CR-407	231869	Semiconductor
CR-408	231869	Semiconductor
CR-409	280440	Semiconductor
L-401	242009-1	Coil, Adjustable
Q-404	240332	Transistor, PNP
Q-405	240332	Transistor, PNP
Q-406	231884	Transistor, PNP
Q-407	231884	Transistor, PNP
Q-408	231884	Transistor, PNP
Q-409	243920-3	Transistor, PNP
R-401	5-115557-273	Resistor
R-402	5-115558-470	Resistor
R-403	5-115557-272	Resistor
R-404	5-115557-181	Resistor
R-405	5-115557-181	Resistor
R-406	240539-501	Resistor, Variable
R-407	5-115558-152	Resistor
R-408	5-115557-333	Resistor
R-409	5-115557-333	Resistor
R-410	5-115557-103	Resistor
R-411	5-115557-103	Resistor
R-412	5-115557-331	Resistor
R-413	5-115557-222	Resistor
R-414	5-115557-472	Resistor
R-415	240539-202	Resistor, Variable
R-416	5-115557-331	Resistor
R-417	5-115557-120	Resistor
R-418	5-115557-331	Resistor
R-419	5-115557-562	Resistor
R-420	5-115557-123	Resistor
T-401	243188	Transformer

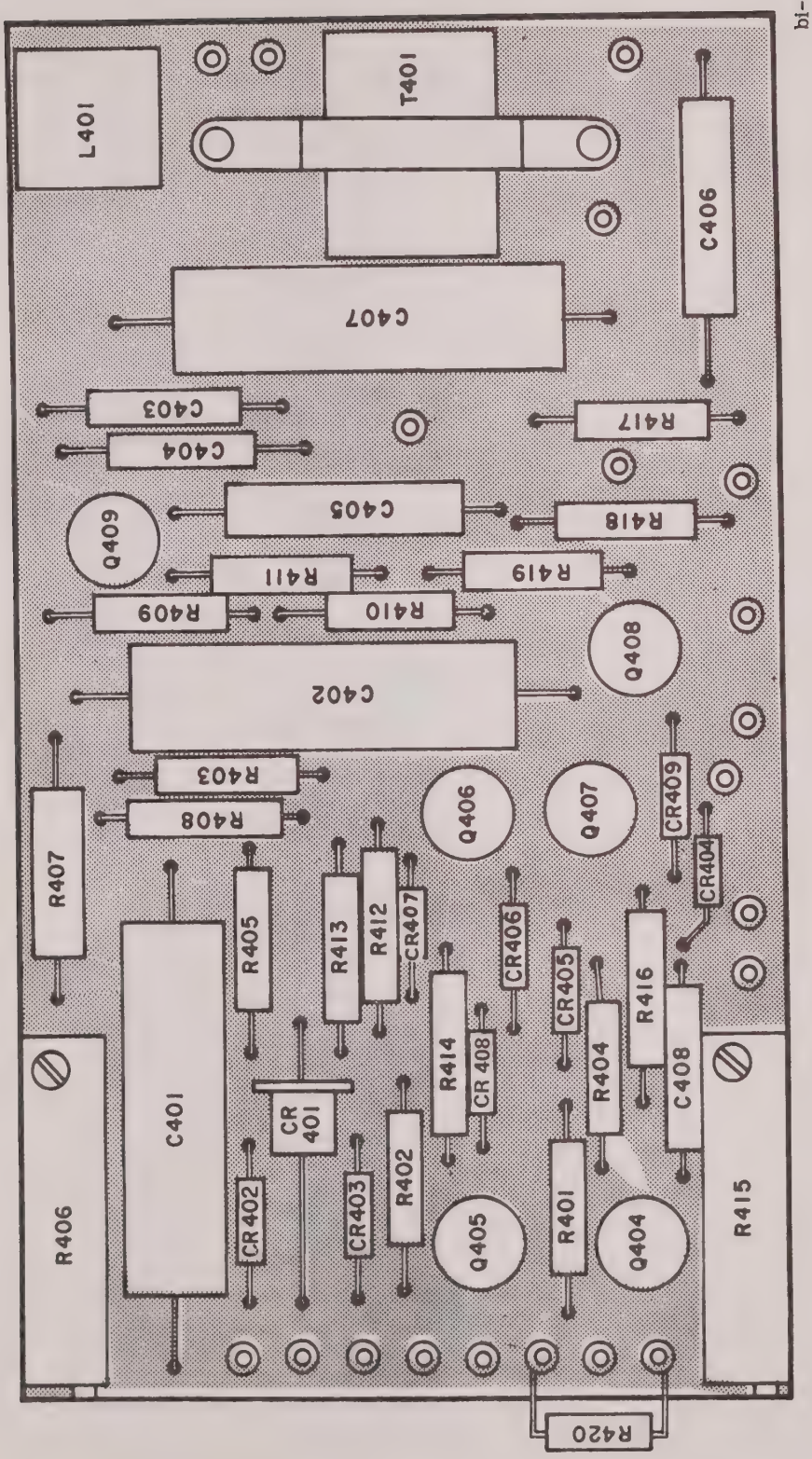

FIGURE 8-18 20 KHz OSCILLATOR 442822-910

PLAN VIEW PARTS LIST
15-5221-11 DRIVE AMPLIFIER ASM 848155
FIGURE 8-19

SYMBOL NO	PART NUMBER	DESCRIPTION
C-101	10-125904-602	Capacitor
C-102	10-241145-304	Capacitor
C-103	10-241145-403	Capacitor
C-104	10-125904-203	Capacitor
C-105	10-125904-303	Capacitor
C-106	231922-356	Capacitor
C-107	231922-356	Capacitor
C-108	10-125904-152	Capacitor
C-109	10-125904-103	Capacitor
C-110	10-231854-560	Capacitor
C-111	10-231854-560	Capacitor
C-112	10-125904-103	Capacitor
C-114	10-125904-602	Capacitor
C-115	240352-302	Capacitor
CR-101	244311	Semiconductor
CR-102	244311	Semiconductor
CR-103	244311	Semiconductor
CR-104	244311	Semiconductor
CR-105	244311	Semiconductor
CR-106	244311	Semiconductor
CR-107	244311	Semiconductor
CR-108	231869	Semiconductor
L-101	243179	Reactor, 250mh
L-103	243179	Reactor, 250mh
Q-101	231884	Transistor, PNP
Q-102	243920-3	Transistor, PNP
Q-103	240236	Transistor, PNP
Q-104	240237	Transistor, NPN
Q-105	240236	Transistor, PNP
Q-106	240237	Transistor, NPN
Q-107	242323	Transistor
Q-108	242323	Transistor
Q-109	247149	Transistor, PNP
Q-110	247149	Transistor, PNP
Q-111	242323	Transistor, NPN
Q-112	242323	Transistor, NPN
Q-113	242323	Transistor, NPN
Q-114	243009-28	Transistor, PNP
Q-115	243009-28	Transistor, PNP
Q-120	242323	Transistor, NPN

PLAN VIEW PARTS LIST (Continued)
15-5221-11 DRIVE AMPLIFIER ASSEMBLY 848155
FIGURE 8-19

SYMBOL NO	PART NUMBER	DESCRIPTION
R-101	1-128182-1802	Resistor
R-102	1-128182-8892	Resistor
R-103	1-128182-5002	Resistor
R-105	1-128182-4702	Resistor
R-106	243379-104	Resistor, Variable
R-107	5-115557-683	Resistor
R-108	5-115557-682	Resistor
R-109	1-128182-3902	Resistor
R-110	1-128182-6001	Resistor
R-111	1-128182-1003	Resistor
R-112	1-128182-1002	Resistor
R-113	1-128182-1002	Resistor
R-114	1-128182-1002	Resistor
R-115	1-128182-1002	Resistor
R-116	5-115557-825	Resistor
R-117	1-128182-1003	Resistor
R-118	243379-203	Resistor, Variable
R-119	1-128182-1004	Resistor
R-120	5-115557-332	Resistor
R-121	5-115557-103	Resistor
R-122	5-115557-102	Resistor
R-123	1-128182-6802	Resistor
R-124	1-128182-3502	Resistor
R-125	243379-203	Resistor, Variable
R-126	243379-203	Resistor, Variable
R-127	1-128182-3502	Resistor
R-128	1-128182-6802	Resistor
R-129	5-115557-102	Resistor
R-130	5-115557-103	Resistor
R-131	1-128182-1502	Resistor
R-132	1-128182-1502	Resistor
R-133	1-128182-1001	Resistor
R-134	1-128182-1001	Resistor
R-135	5-115557-222	Resistor
R-137	50-128182-3030	Resistor
R-138	50-128182-3030	Resistor
R-140	5-115557-222	Resistor
R-141	5-115557-390	Resistor
R-142	5-115557-390	Resistor
R-145	5-115557-103	Resistor
R-146	5-115557-102	Resistor
R-147	5-115557-102	Resistor
R-148	5-115557-911	Resistor
T-101	243590-910	Transformer Asm

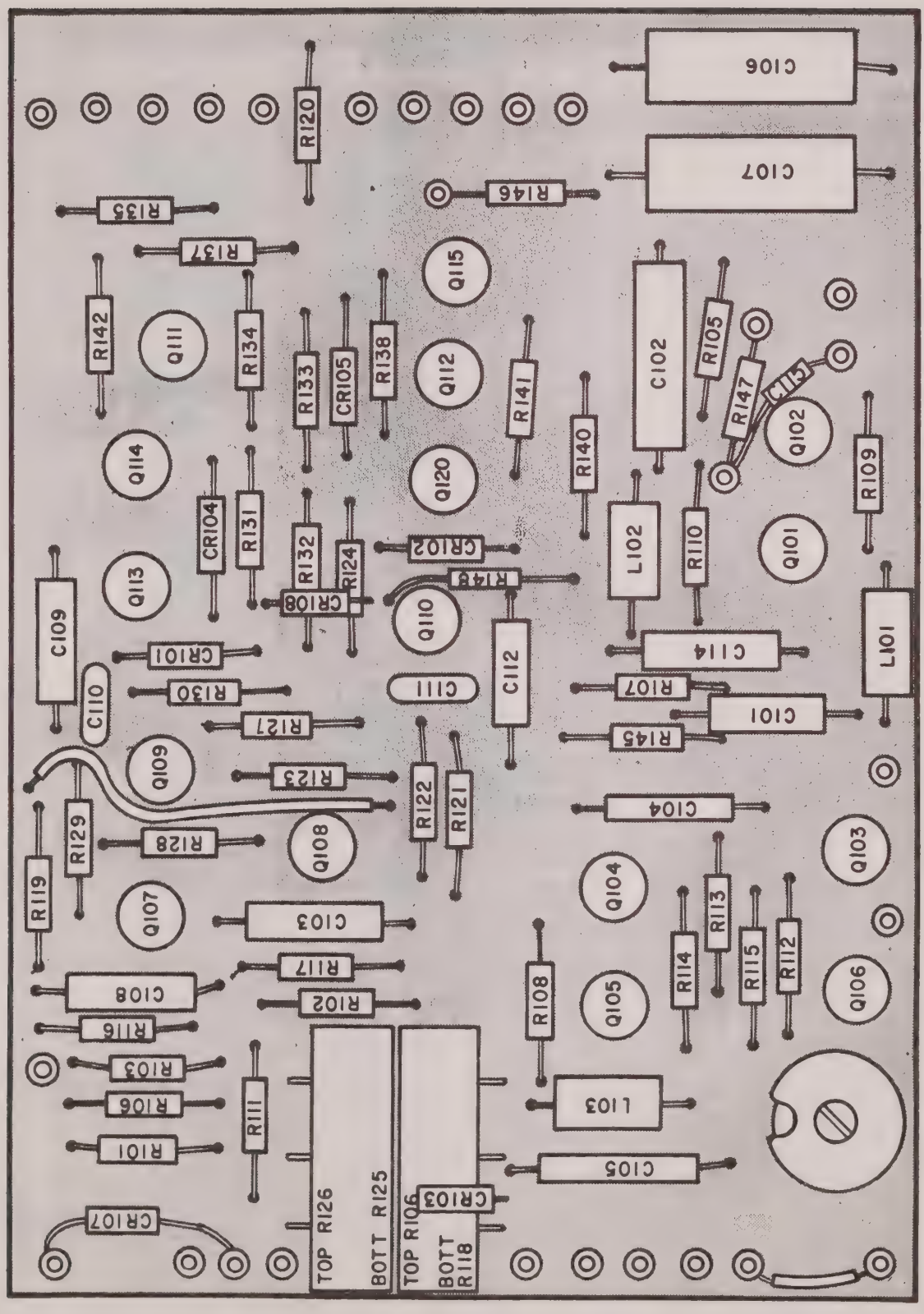

FIGURE 8-19 AMPLIFIER ASSEMBLY 848155

PLAN VIEW PARTS LIST
15-5221-21 DRIVE AMPLIFIER 20 KHz OSCILLATOR 846584
FIGURE 8-20

SYMBOL NO	PART NUMBER	DESCRIPTION
C-401	243006-356	Capacitor
C-402	231922-107	Capacitor
C-403	10-125904-332	Capacitor
C-404	10-125904-332	Capacitor
C-405	10-125904-154	Capacitor
C-406	5-130488-503	Capacitor
C-407	243006-356	Capacitor
C-408	10-241145-143	Capacitor
CR-401	1-230061-8	Semiconductor
CR-402	130198-1	Semiconductor
CR-403	130198-1	Semiconductor
CR-404	241133	Semiconductor, 1N751A
CR-405	249747	Semiconductor, 1N752A
CR-406	241133	Semiconductor, 1N751A
CR-407	231869	Semiconductor, 1N816
CR-408	231869	Semiconductor, 1N816
CR-409	280440	Semiconductor, 1N816
L-401	242009-1	Coil
Q-404	240332	Transistor, 2N1371
Q-405	240332	Transistor, 2N1371
Q-406	231884	Transistor, 2N1370
Q-407	231884	Transistor, 2N1370
Q-408	231884	Transistor, 2N1370
Q-409	243920-3	Transistor, 2N1193
R-401	5-115557-273	Resistor
R-402	5-115558-470	Resistor
R-403	5-115557-272	Resistor
R-404	5-115557-181	Resistor
R-405	5-115557-181	Resistor
R-406	240539-501	Resistor, Variable
R-407	5-115558-152	Resistor
R-408	5-115557-333	Resistor
R-409	5-115557-333	Resistor
R-410	5-115557-103	Resistor
R-411	5-115557-103	Resistor
R-412	5-115557-331	Resistor
R-413	5-115557-222	Resistor
R-414	5-115557-562	Resistor
R-415	240539-202	Resistor, Variable

PLAN VIEW PARTS LIST (Continued)
15-5221-21 DRIVE AMPLIFIER 20KHz OSCILLATOR 846584
FIGURE 8-20

SYMBOL NO	PART NUMBER	DESCRIPTION
R-416	5-115557-331	Resistor
R-417	5-115557-120	Resistor
R-418	5-115557-331	Resistor
R-419	5-115557-562	Resistor
R-420	5-115557-123	Resistor
T-401	243188	Transformer, 20KC

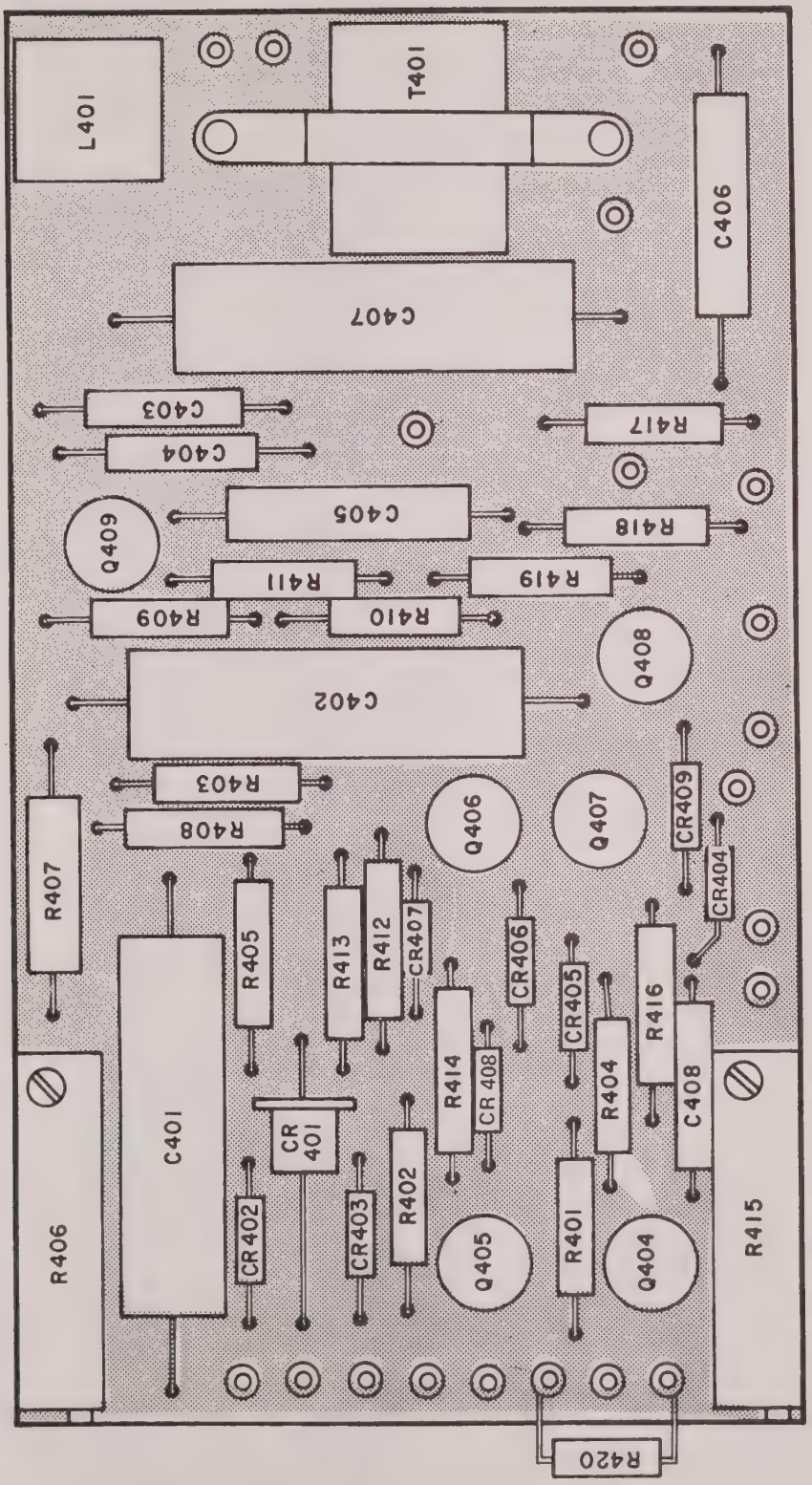

FIGURE 8-20 20 KHz OSCILLATOR 846584

PLAN VIEW PARTS LIST
15-5221-21 DRIVE AMPLIFIER ASM 848167
FIGURE 8-21

SYMBOL NO	PART NUMBER	DESCRIPTION
C-101	10-125904-602	Capacitor
C-102	10-241145-304	Capacitor
C-103	10-241145-403	Capacitor
C-104	10-125904-203	Capacitor
C-105	10-125904-303	Capacitor
C-106	231922-356	Capacitor
C-107	231922-356	Capacitor
C-108	10-125904-102	Capacitor
C-109	10-125904-332	Capacitor
C-110	10-231854-271	Capacitor
C-111	10-231854-560	Capacitor
C-112	10-125904-332	Capacitor
C-113	10-241145-403	Capacitor
C-114	10-125904-602	Capacitor
C-115	240352-302	Capacitor
CR-101	244311	Semiconductor
CR-102	244311	Semiconductor
CR-103	244311	Semiconductor
CR-104	244311	Semiconductor
CR-105	244311	Semiconductor
CR-106	244311	Semiconductor
CR-107	244311	Semiconductor
CR-108	231869	Semiconductor 1N816
L-101	243179	Reactor
L-102	243179	Reactor
L-103	243179	Reactor
Q-101	231884	Transistor
Q-102	243920-3	Transistor
Q-103	240236	Transistor, 2N1303
Q-104	240237	Transistor, 2N1302
Q-105	240236	Transistor, 2N1303
Q-106	240237	Transistor, 2N1302
Q-107	242323	Transistor
Q-108	242323	Transistor
Q-109	247149	Transistor
Q-110	247149	Transistor
Q-111	242323	Transistor
Q-112	242323	Transistor
Q-113	242323	Transistor
Q-114	243009-28	Transistor, 2N1186
Q-115	243009-28	Transistor, 2N1186
Q-120	242323	Transistor

PLAN VIEW PARTS LIST (Continued)
15-5221-21 DRIVE AMPLIFIER ASM 848167
FIGURE 8-21

SYMBOL NO	PART NUMBER	DESCRIPTION
R-101	1-128182-2752	Resistor
R-102	1-128182-4092	Resistor
R-103	1-128182-5002	Resistor
R-105	1-128182-1002	Resistor
R-106	243379-104	Resistor, Variable
R-107	1-128182-4702	Resistor
R-108	5-115557-682	Resistor
R-109	1-128182-3902	Resistor
R-110	5-115557-123	Resistor
R-111	1-128182-1303	Resistor
R-112	1-128182-1002	Resistor
R-113	1-128182-1002	Resistor
R-114	1-128182-1002	Resistor
R-115	1-128182-1002	Resistor
R-116	5-115557-155	Resistor
R-117	1-128182-1003	Resistor
R-118	243379-203	Resistor, Variable
R-119	1-128182-2504	Resistor
R-120	5-115557-332	Resistor
R-121	1-128182-4702	Resistor
R-122	5-115557-102	Resistor
R-123	1-128182-6802	Resistor
R-124	1-128182-3502	Resistor
R-125	243379-203	Resistor, Variable
R-126	243379-203	Resistor, Variable
R-127	1-128182-3502	Resistor
R-128	1-128182-6802	Resistor
R-129	5-115557-272	Resistor
R-130	1-128182-4702	Resistor
R-131	1-128182-1502	Resistor
R-132	1-128182-1502	Resistor
R-133	1-128182-1001	Resistor
R-134	1-128182-1001	Resistor
R-135	5-115557-222	Resistor
R-137	50-128182-3030	Resistor
R-138	50-128182-3030	Resistor
R-140	5-115557-222	Resistor
R-141	5-115557-390	Resistor
R-142	5-115557-390	Resistor
R-145	5-115557-103	Resistor

PLAN VIEW PARTS LIST (Continued)
15-5221-21 DRIVE AMPLIFIER ASM 848167
FIGURE 8-21

SYMBOL NO	PART NUMBER	DESCRIPTION
R-146	5-115557-102	Resistor
R-147	5-115557-101	Resistor
R-148	5-115557-911	Resistor
T-101	243590-910	Transformer Asm.

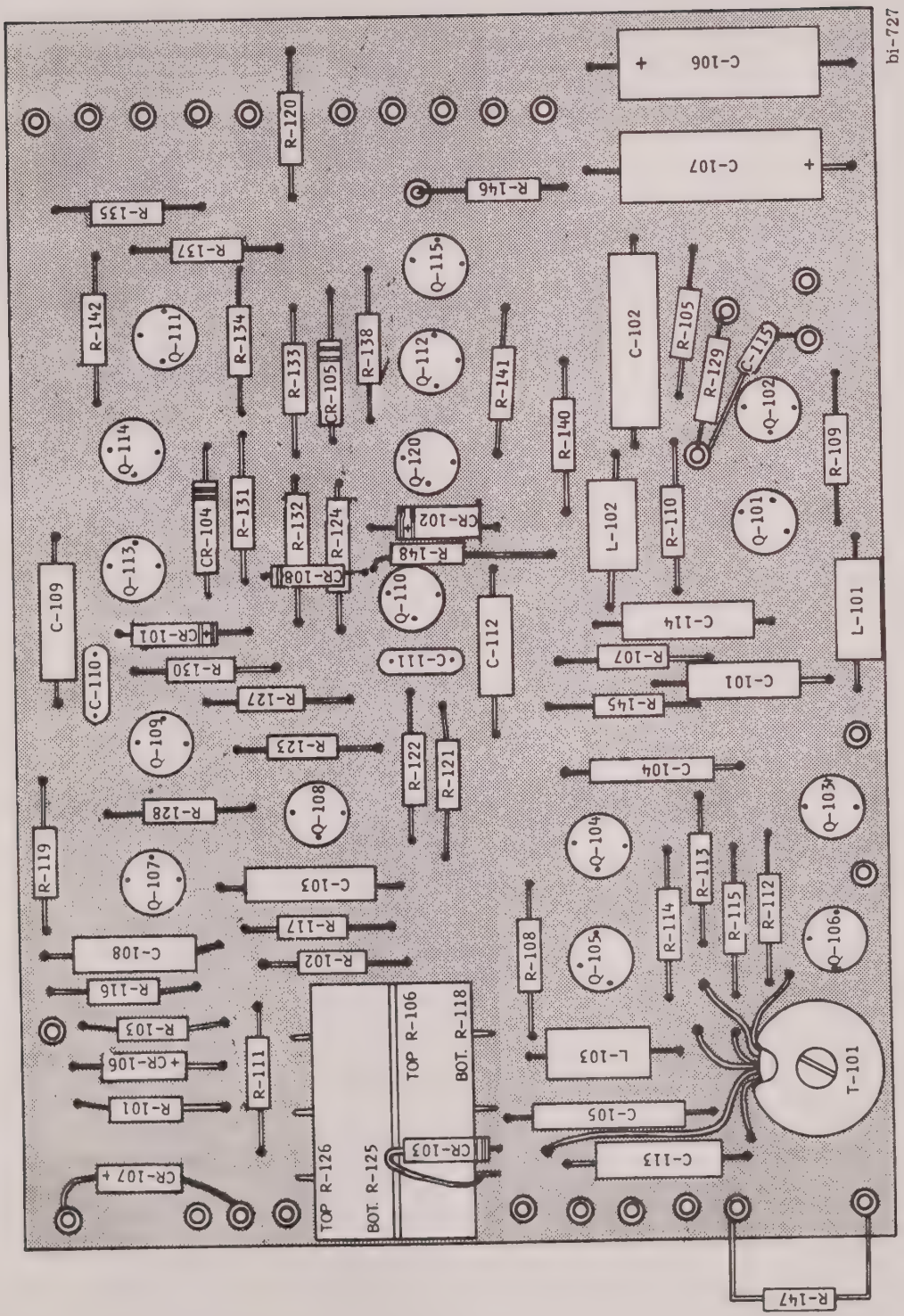

FIGURE 8-21 AMPLIFIER ASSEMBLY 848167

EXPLODED VIEW PARTS LIST
MULTIMARKER AMPLIFIER MODEL 13-5281-01
FIGURE 8-22

ITEM NO	PART NUMBER	DESCRIPTION	SYMBOL NO
1	346130	Connector Plate	
2	246110	Transformer	T-802
3	242981	Retainer, Fastener	
4	243710	Fastener, Positive Lock	
5	232887	Connector	J-801
6	243675-1	Handle	
7	246110	Transformer	T-801
8	646164	Bracket Asm.	
9	232003	Relay	K-802
10	232003	Relay	K-801
11	649936	Chassis Subasm	
12	123108-62	Grommet	
13	123108-62	Grommet	
14	124804-2	Clamp, Cable	
15	245075	Connector	J-802
16	246759	Spacer	
17	246759	Spacer	
18	124804-2	Clamp, Cable	
19	124804-2	Clamp, Cable	
20	123108-62	Grommet	
21	248180	Plate, Key	
22	243029-507	Capacitor	C-804
23	122228-1	Plate, Capacitor	
24	864122	Network Asm., Amplifier(See Fig.8-24) (see sep. dwg)	
25	122228-1	Plate, Capacitor	
26	243029-507	Capacitor	C-803
27	122228-1	Plate, Capacitor	
28	243029-507	Capacitor	C-802
29	122228-1	Plate, Capacitor	
30	243029-507	Capacitor	C-801
31	864122	Network Asm., Amplifier	
32	346129	Bracket, Connector	
33	243002	Connector	
34	242016	Support, Slide	
35	242016	Support, Slide	
36	248309	Spacer, Slide	
37	668146-4	Fuseholder	
38	102625-8	Fuse	F-801
39	102625-8	Fuse (spare)	
40	243029-507	Capacitor	C-808

EXPLODED VIEW PARTS LIST (Continued)
MULTIMARKER AMPLIFIER MODEL 13-5281-01
FIGURE 8-22

ITEM NO	PART NUMBER	DESCRIPTION	SYMBOL NO
41	122228-1	Plate, Capacitor	
42	243029-507	Capacitor	C-807
43	122228-1	Plate, Capacitor	
44	243029-507	Capacitor	C-806
45	122228-1	Plate, Capacitor	
46	243029-507	Capacitor	C-805
47	122228-1	Plate, Capacitor	
48	123108-62	Grommet	
49	124804-2	Clamp, Cable	
50	246759	Spacer	
51	245075	Connector	J-803
52	124804-2	Clamp, Cable	
53	246759	Spacer	
54	232003	Relay	K-804
55	232003	Relay	K-803
56	123108-62	Grommet	
57	123108-62	Grommet	
58	746803	Network Asm (See Fig. 8-23)	
59	649936	Chassis Subasm	
60	124804-2	Clamp, Cable	
61	248309	Spacer, Plate	
62	242016	Support, Slide	
63	242016	Support, Slide	

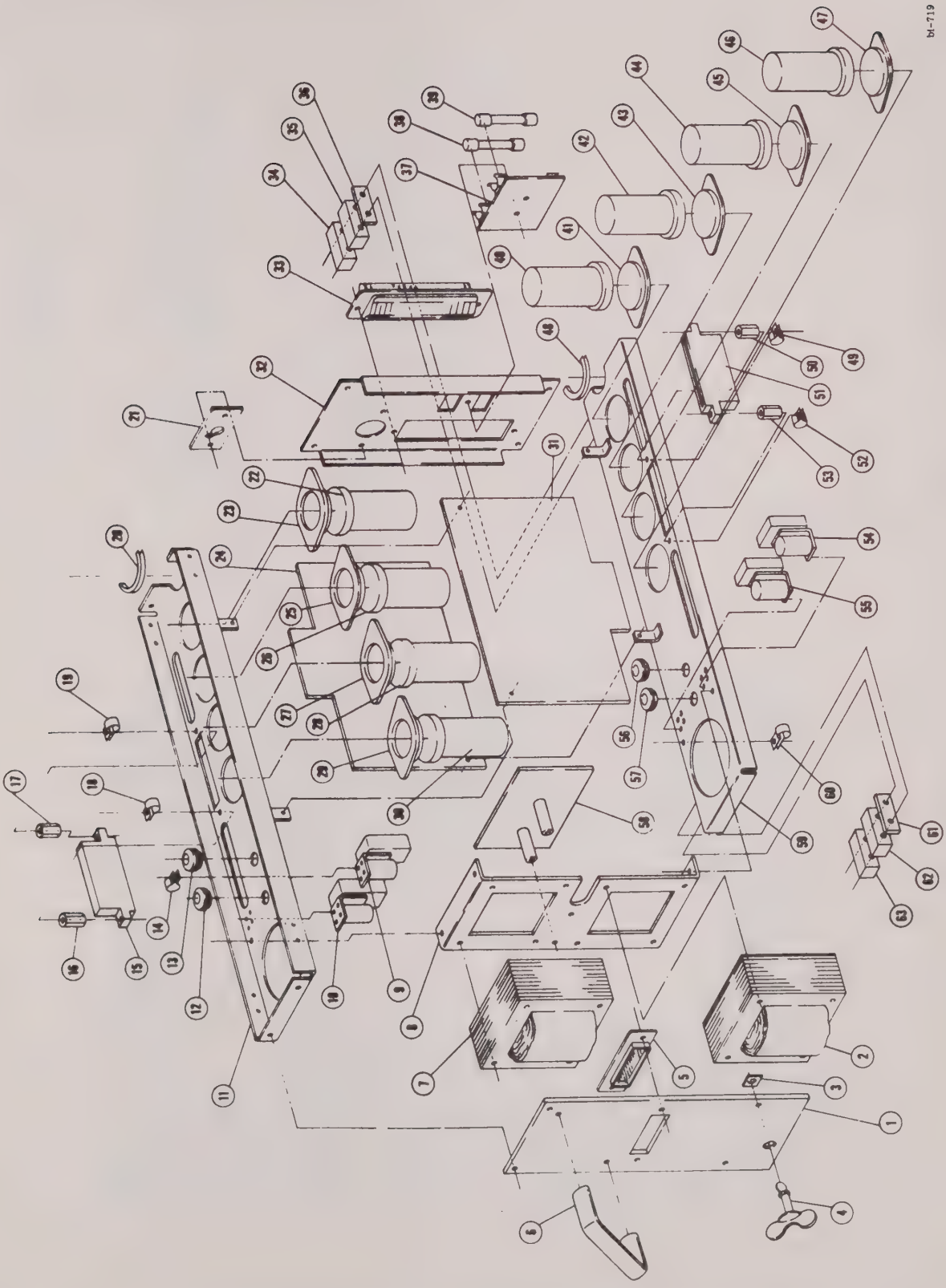

FIGURE 8-22 MULTIMARKER AMPLIFIER, MODEL 13-5281-01

PLAN VIEW PARTS LIST
13-5281-01 AMPLIFIER NETWORK ASM 746803
FIGURE 8-23

SYMBOL NO	PART NUMBER	DESCRIPTION
C-820	243685-107	Capacitor
C-821	243228-107	Capacitor
CR-820	130198-1	Semiconductor
CR-821	130198-1	Semiconductor
CR-822	130198-1	Semiconductor
CR-823	243050	Semiconductor
CR-824	231869	Semiconductor
CR-825	231869	Semiconductor
R-820	5-115559-152	Resistor
R-821	241465	Resistor, Variable
R-822	5-115557-271	Resistor
R-823	5-119370-150	Resistor

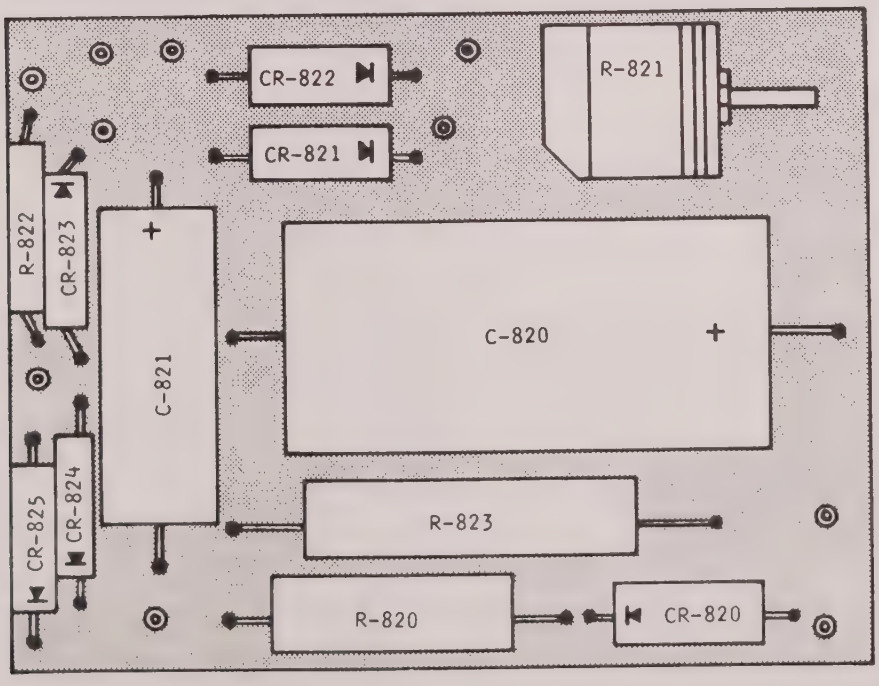

FIGURE 8-23 NETWORK ASSEMBLY 746803

PLAN VIEW PARTS LIST
13-5281-01 AMPLIFIER ASM 864122
FIGURE 8-24

SYMBOL NO	PART NUMBER	DESCRIPTION
CR-801	231887	Semiconductor
CR-802	231887	Semiconductor
CR-803	231887	Semiconductor
CR-804	231887	Semiconductor
CR-805	246107	Semiconductor
CR-806	231869	Semiconductor
CR-807	231869	Semiconductor
CR-808	5-244922-11	Semicondoctor
Q-801	242323	Transistor
Q-802	247149	Transistor
Q-803	262804	Transistor
R-801	246108	Resistor
R-802	5-119370-183	Resistor
R-803	5-115557-222	Resistor
R-804	5-115557-273	Resistor
R-805	5-115557-822	Resistor
R-806	5-115557-104	Resistor
R-807	5-115557-564	Resistor
R-808	5-115557-392	Resistor
R-809	5-115557-100	Resistor, Variable
	231978	Pad, Transistor Mtg.

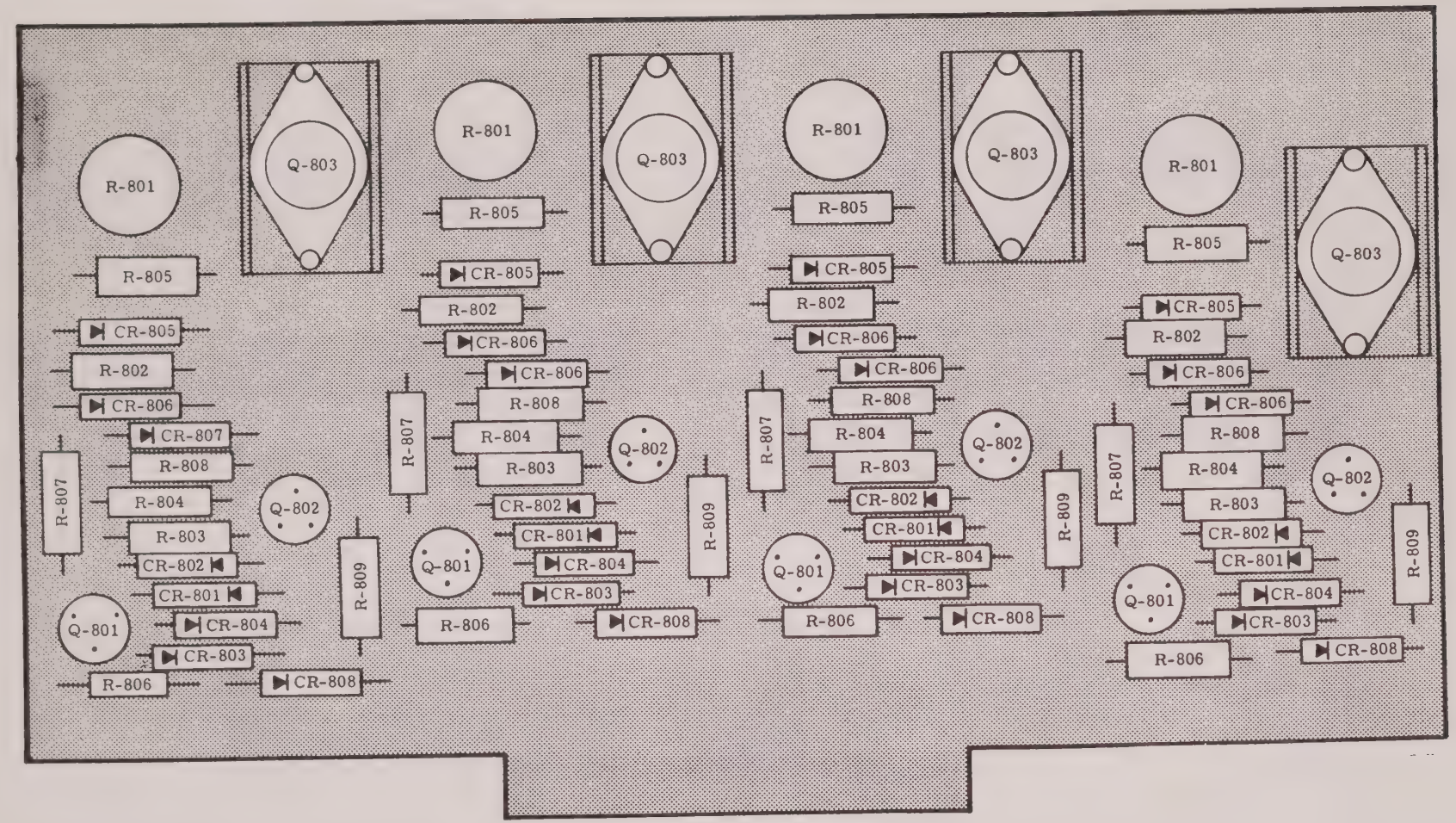

FIGURE 8-24 AMPLIFIER ASSEMBLY 864122

EXPLODED VIEW PARTS LIST
CALIBRATION & SYSTEM POWER ASM MODEL 0000-5403-20
FIGURE 8-25

ITEM NO	PART NUMBER	DESCRIPTION	SYMBOL NO
1	362195	Button, Push	
2	362195	Button, Push	
3	362195	Button, Push	
4	362195	Button, Push	
5	362195	Button, Push	
6	362195	Button, Push	
7	362195	Button, Push	
8	362195	Button, Push	
9	362195-1004	Button, Push	
10	362195-1002	Button, Push	
11	362195-1003	Button, Push	
12	362195-1001	Button, Push	
13	231962	Ballast	RT-160
14	248211-24	Lampholder	XDS-161A
15	232136	Lamp, Flourescent	DS-160
16	248211-24	Lampholder	XDS-161B
17	349888	Switch	S-163
18	5-119370-500	Resistor	R-169
19	5-119370-750	Resistor	R-169
20	862086	Switch Asm (See Fig. 8-26)	
21	5-241521-500	Resistor, Variable	R-171
22	231964	Starter, Lamp	XS-161
23	231965	Socket, Lamp Starter	
24	262091-351	Resistor, Variable	R-164
25	124804-2	Clamp, Cable	
26	2-112429-10	Board, Terminal	TB-106
27	124804-3	Clamp, Cable	
28	10-241145-205	Capacitor	C-161
29	129758	Holder, Fuse	
30	116198-18	Fuse	F-160
31	344574	Transformer	T-160
32	249889	Switch, Push	S-162
33		Wheel	
34	261043-102	Resistor, Variable	R-170
35	745363	Cable Asm.	
36	243476	Connector	P-170
37	119993-112	Clamp, Cable	
38	118259-6	Bushing, Cable Clamp	
39	118259-8	Bushing, Cable Clamp	
40	118259-10	Bushing, Cable Clamp	
41	123108-62	Grommet	
	443607-910	Relay Assy (see Fig. 8-27)	

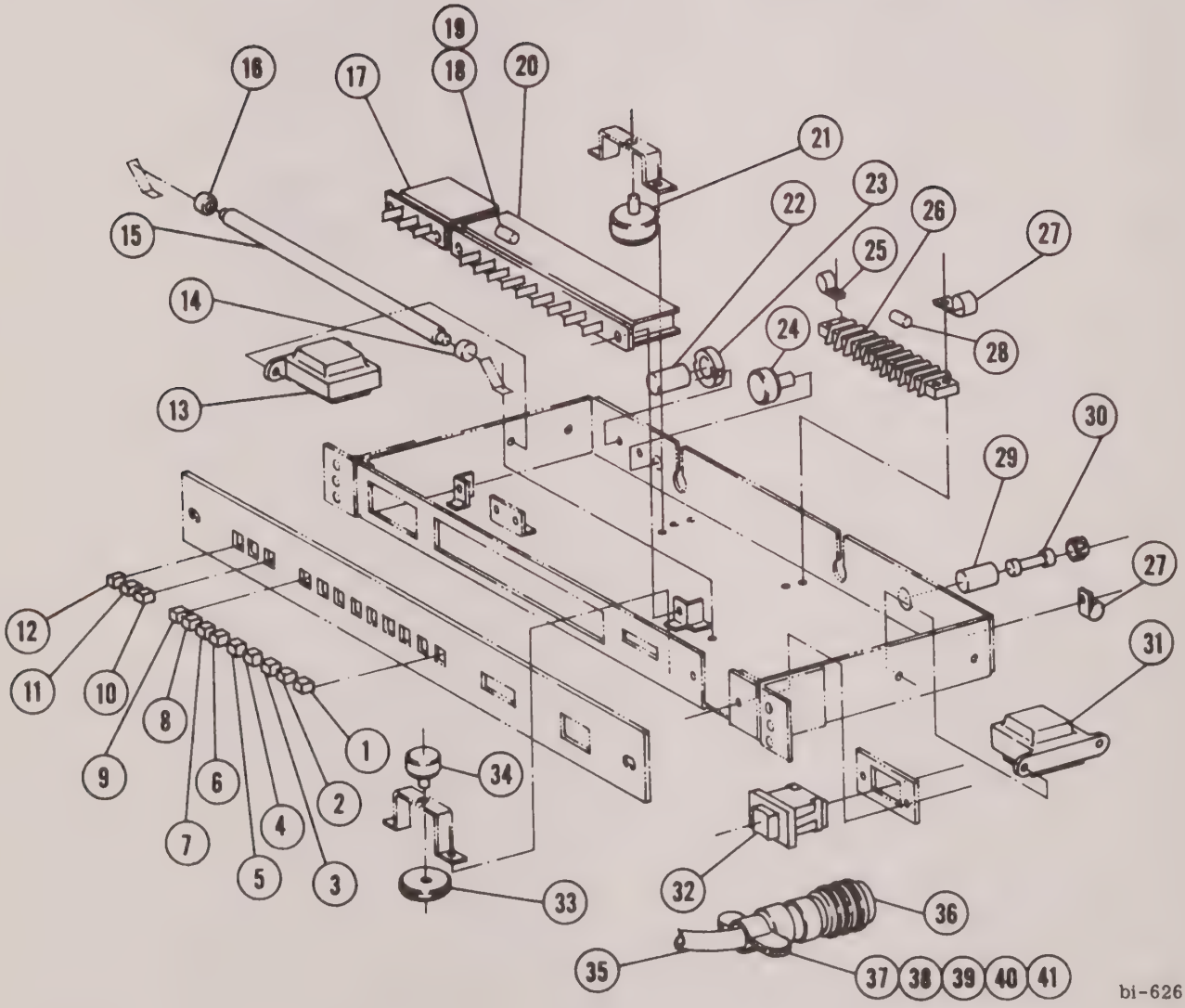

FIGURE 8-25 0000-5403-20 AMP. CALIBRATION AND SYSTEM POWER ASSEMBLY

PLAN VIEW PARTS LIST
0000-5403-20 ASSEMBLY SWITCH ASM 862096
FIGURE 8-26

ITEM NO	PART NUMBER	DESCRIPTION	SYMBOL NO
1	343691	Switch, Pushbutton, 9 Pos.	S-160
2	130198-1	Rectifier	CR-160
3	5-115557-220	Resistor	R-160
4	5-119370-501	Resistor	R-161
5	5-119370-501	Resistor	R-162
6	130198-1	Rectifier	CR-161
7	5-119370-351	Resistor	R-163
8	5-115557-683	Resistor	R-172
9	249747	Diode	CR-163
10	25-240368-25000	Resistor	R-167
11	25-240368-25000	Resistor	R-168
12	232253	Diode	CR-162
13	5-119370-202	Resistor	R-165
14	5-119370-202	Resistor	R-166
15	130198-1	Rectifier	CR-164
16	128020-107	Capacitor	C-160

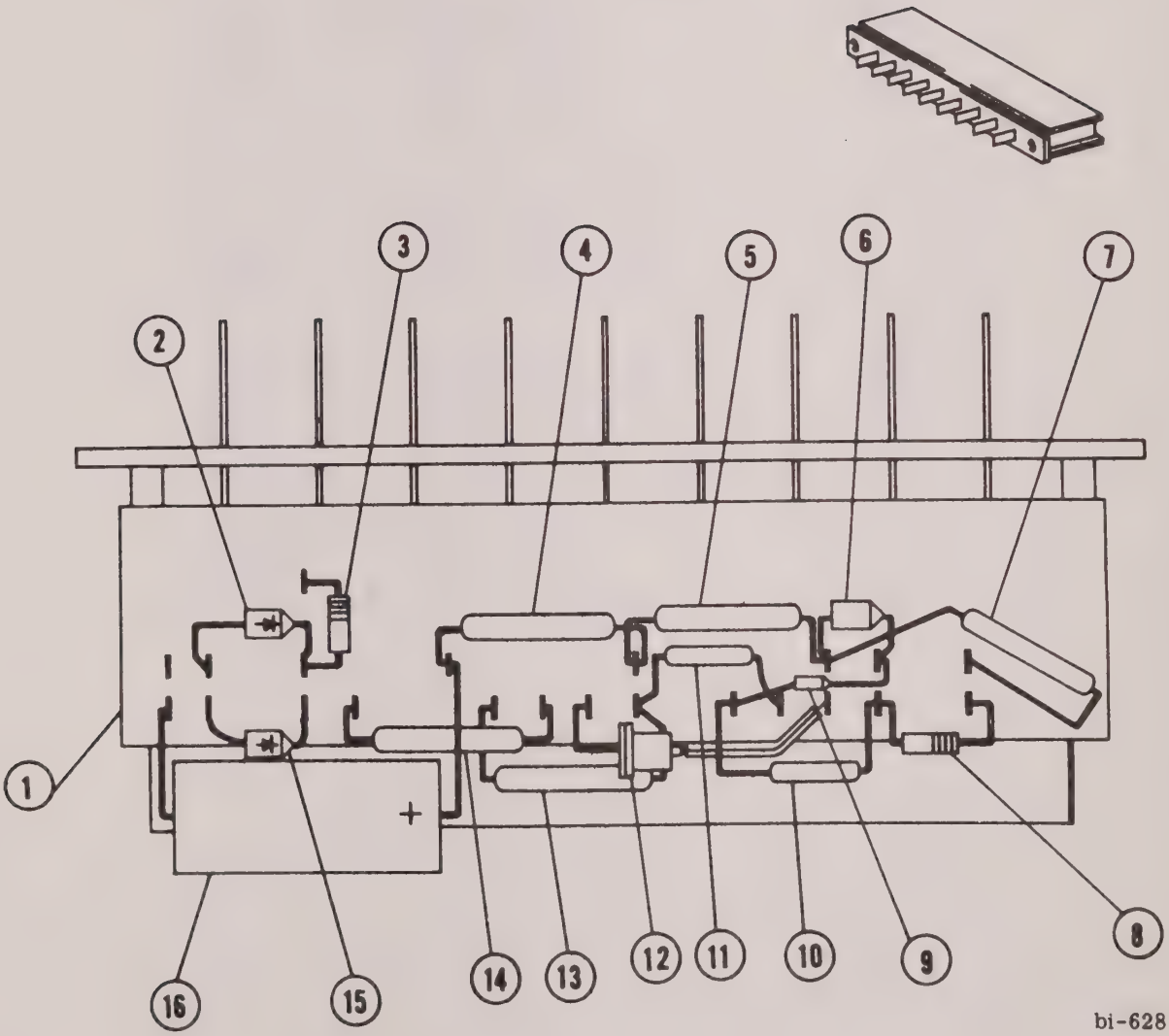

FIGURE 8-26 SWITCH ASSEMBLY 862096

EXPLODED VIEW PARTS LIST
0000-5403-20 ASSEMBLY RELAY ASM., MODEL 11-5403-10
FIGURE 8-27

ITEM NO	PART NUMBER	DESCRIPTION	SYMBOL NO
1	443607-910	Relay Assy, Calibration Unit	
2	843711	Support Assy, Relay	
3	232003	Relay, Armature	K-178
4	232003	Relay, Armature	K-177
5	232003	Relay, Armature	K-176
6	232003	Relay, Armature	K-175
7	232003	Relay, Armature	K-174
8	232003	Relay, Armature	K-173
9	232003	Relay, Armature	K-172
10	232003	Relay, Armature	K-171
11	130198-1	Semiconductor, Diode	CR-171
12	130198-1	Semiconductor, Diode	CR-172
13	130198-1	Semiconductor, Diode	CR-173
14	130198-1	Semiconductor, Diode	CR-174
15	130198-1	Semiconductor, Diode	CR-175
16	130198-1	Semiconductor, Diode	CR-176
17	130198-1	Semiconductor, Diode	CR-177
18	130198-1	Semiconductor, Diode	CR-178
19	243475	Connector, Recpt., 17 Pin, Male	J-170
20	1-216886-304	Board, Terminal	TB-181A
21	1-216886-304	Board, Terminal	TB-182A
22	1-216886-304	Board, Terminal	TB-183A
23	1-216886-304	Board, Terminal	TB-184A

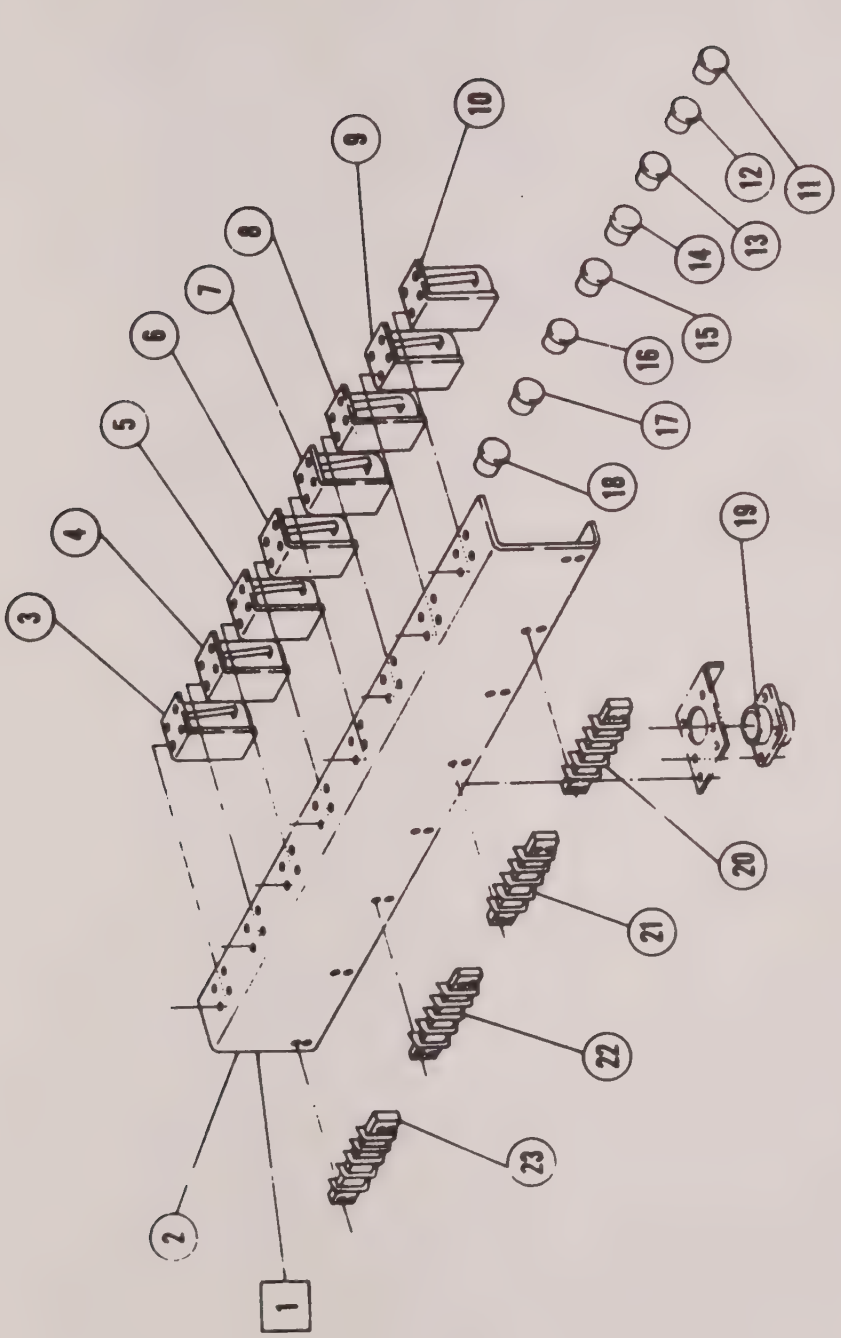

FIGURE 8-27 RELAY ASSEMBLY 11-5403-10

EXPLODED VIEW PARTS LIST
MAIN CONNECTOR PANEL MODEL 11-1601-11
FIGURE 8-28

ITEM NO	PART NUMBER	DESCRIPTION	SYMBOL NO
1	441821	Panel, Connector	
2	245449-1	Plate, Cover	
3	284866	Connector Receptacle, Male	J-1
4	284422-10	Circuit Breaker, 10A	CB-1
5	284422-5	Circuit Breaker, 5A	CB-3
6	767077	Bracket Assembly	
7	265814-10	Terminal Board, Quick Disconnect	TB-1
8	667067	Terminal Board Cover Asm	
9	241794-10	Bracket Assembly	
10	121048	Connector Receptacle, Female	J-701-A
11	121122	Connector Receptacle, Female	J-5
12	241819	Plate, Adapter	
13	121305	Connector Receptacle, Female	J-4

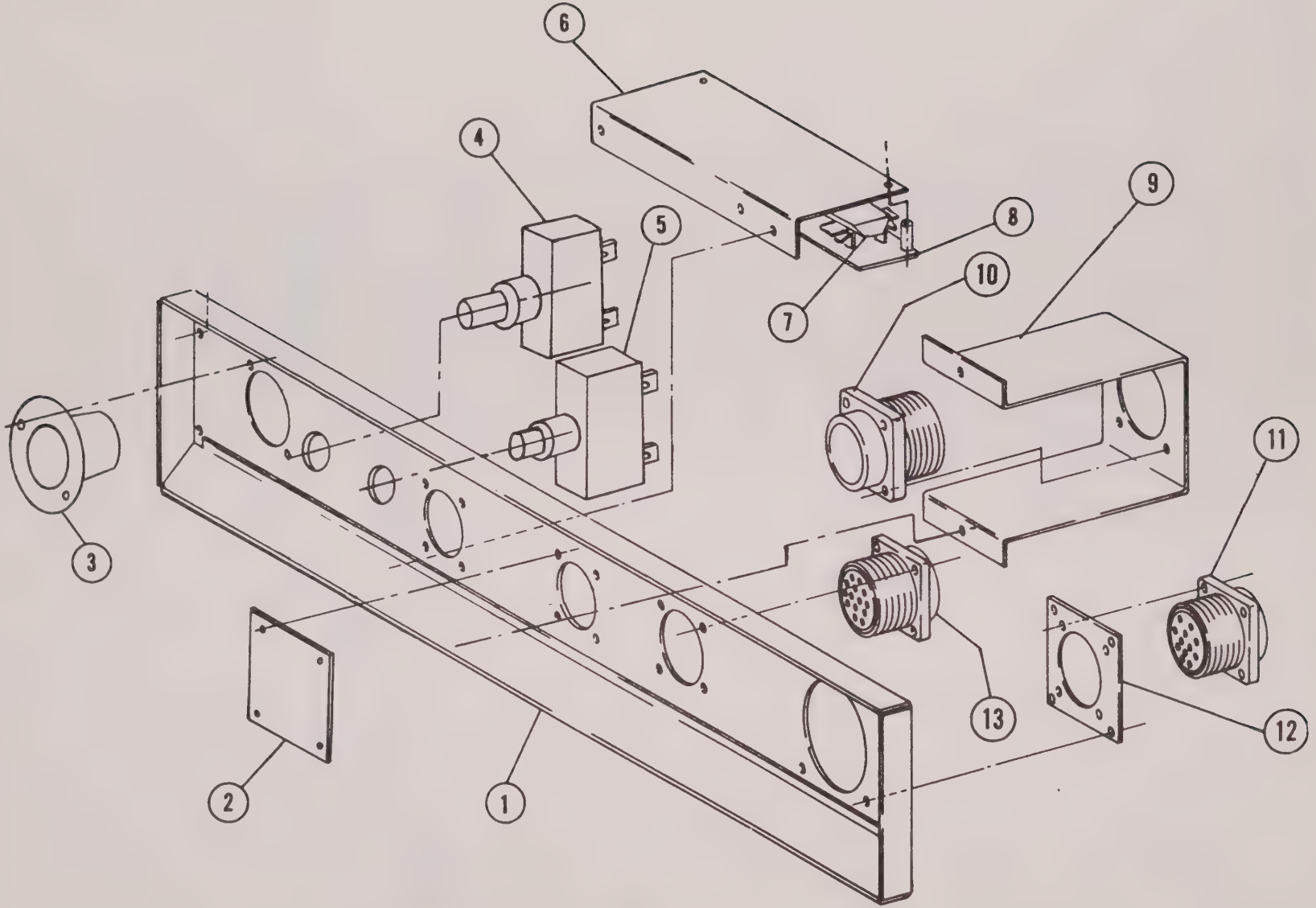

FIGURE 8-28 MAIN CONNECTOR PANEL, MODEL 11-1601-11

EXPLODED VIEW PARTS LIST
SYSTEM POWER PANEL MODEL 11-1603-10
FIGURE 8-29

ITEM NO	PART NUMBER	DESCRIPTION	SYMBOL NO
1	247523-16	Plate, Ident.	
2	884915	Panel Assy	
3	265840-2	Terminal Lug, Recept.	
4	1-284874-1	Switch, Pushbutton	
5	241026-14	Terminal, Lug	
6	267069	Plate, Term.	TB-11
7	267050-10	Term. Bd	
8	667067	Term. Board Cover Assy	
9	124804-3	Clamp, Cable	
	744079	Cable Assembly	
10	265840-2	Terminal Lug, Recept.	

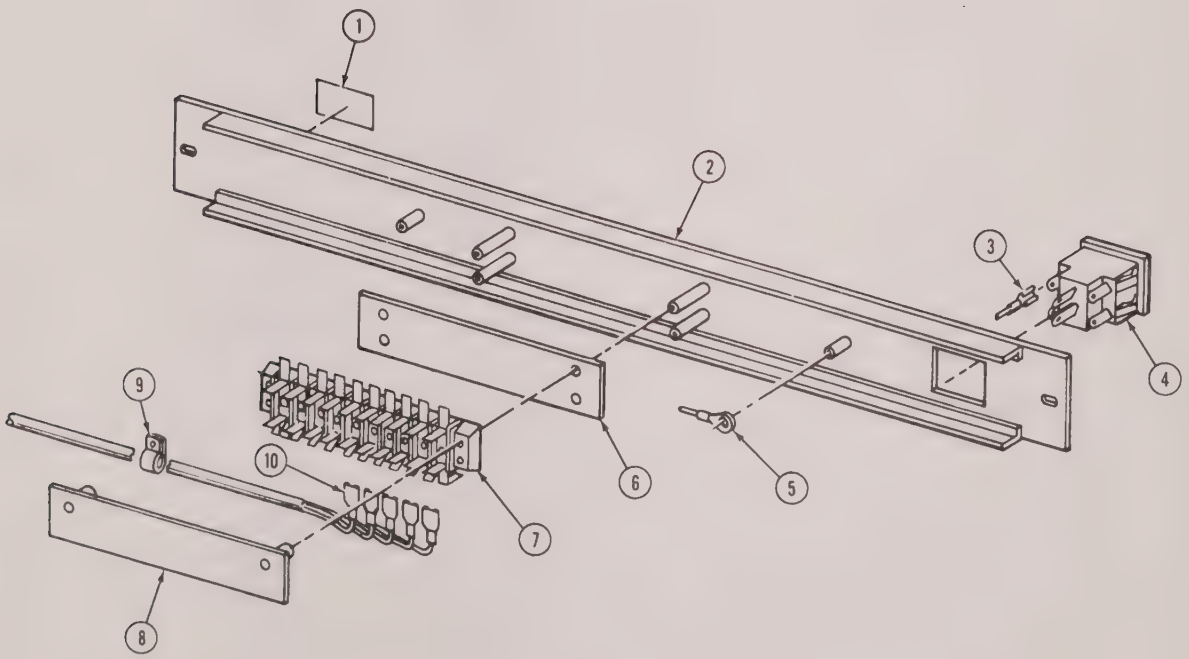

FIGURE 8-29 SYSTEM POWER PANEL MODEL 11-1603-10

EXPLODED VIEW PARTS LIST
CHART TAKE UP ASM. MODEL 11-2231-01
FIGURE 8-30

ITEM NO	PART NUMBER	DESCRIPTION	SYMBOL NO
1	748038	Bracket and Cable Asm., Take-up	
2	347976	Bracket, Switch	
3	646338	Lever Asm., Strike	
4	748918	Switch and Cable Asm	
5	231969	Switch, Push	S-709
6	127666	Switch, Push	S-710
7	241805	Nut, Plain Knurled	
8	124804-2	Clamp, Cable	
9	242051-1	Belt, Timing	
10	647946	Housing Asm.	
11	247945	Housing, Bearing	
12	647948	Pulley Asm.	
13	2-121454-507	Bearing, Ball	
14	647947	Shaft Asm., Pulley	
15	746944	Motor and Bracket Asm., Take-up	
16	242045	Pulley Asm.	
17	261593	Cover, Motor	
18	745803	Bracket Asm.	
19	242683-910	Motor Asm., Rewind	B-702
20	(Reference Only)	Oscillograph Side Panel	
21	(Reference Only)	Oscillograph Back Plate	
22	846341	Shaft Asm., Rewind	
23	746336	Hub Asm.	
24	246333	Sleeve	
25	346335	Shaft, Rewind	
26	243592	Stop	
27	243593	Stop, Spring	
28	243591	Spring	
29	746585	Hub Asm.	
30	232250-1	Bearing	
31	241641-6	Washer, Thrust	
32	241627	Collar	
33	846692	Arm Asm.	
34	846685	Arm, Pull Down	
35	246686	Arm, Pull Down	
36	346687	Shaft, Paper Guide	
37	246684	Spring, Ext.	
38	246682	Arm, Actuating	

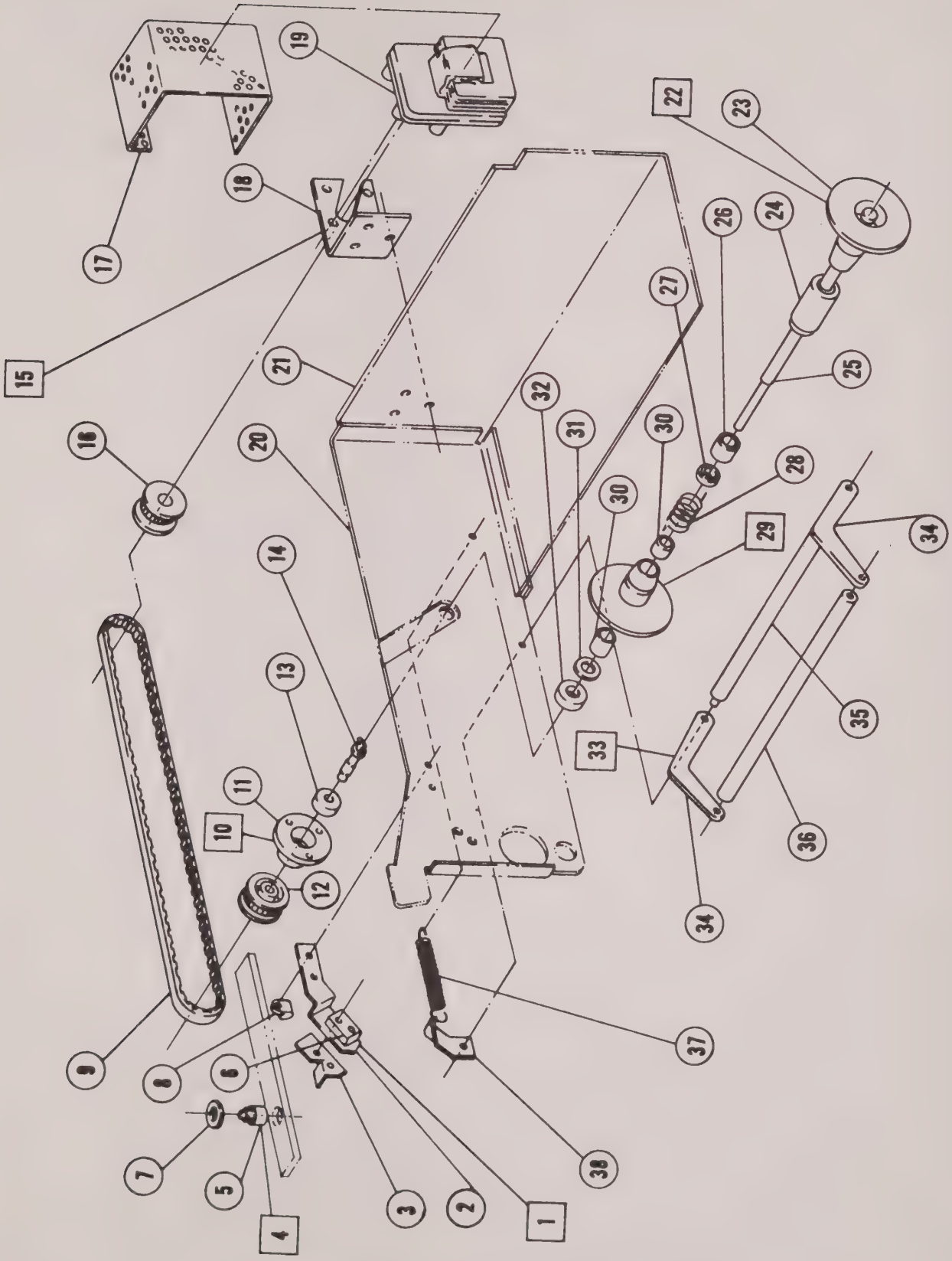

FIGURE 8-30 CHART TAKE-UP MODEL 11-2231-01

EXPLODED VIEW PARTS LIST
CHART TAKE UP ASM MODEL 11-2402-41, -42
FIGURE 8-31

ITEM NO	PART NUMBER	DESCRIPTION
1	341719-910	Hub Asm.
2	241641-6	Bearing, Thrust
3	240080	Ball, Plastic
4	241674-910	Plunger Asm.
5	127903	Spring, Compression
6	261051	Spacer, Threaded
7	241712	Connector
8	123108-32	Grommet
9	761061-1	Cover Asm. (11-2402-41 only)
10	231969	Switch, Push
11	240613	Switch, Slide
12	243674-750	Resistor
†13	241718-910	Motor Asm. (11-2402-41)
	343681-915	Gear Case
	6-119820-306	Pin Grove
13	647142	Motor Asm. (11-2402-42)
14	341719-910	Hub Asm
*15	245218-5	Key, Hex Socket
*16	104278-2	Core, Paper Wound
17	441632	Support, Left
18	441633	Support, Right
19	441677-910	Shaft Asm.
20	268731	Plate, Supporting

*Shown for reference only. Not part of Chart Take-Up Asm.

†Not Procurable.

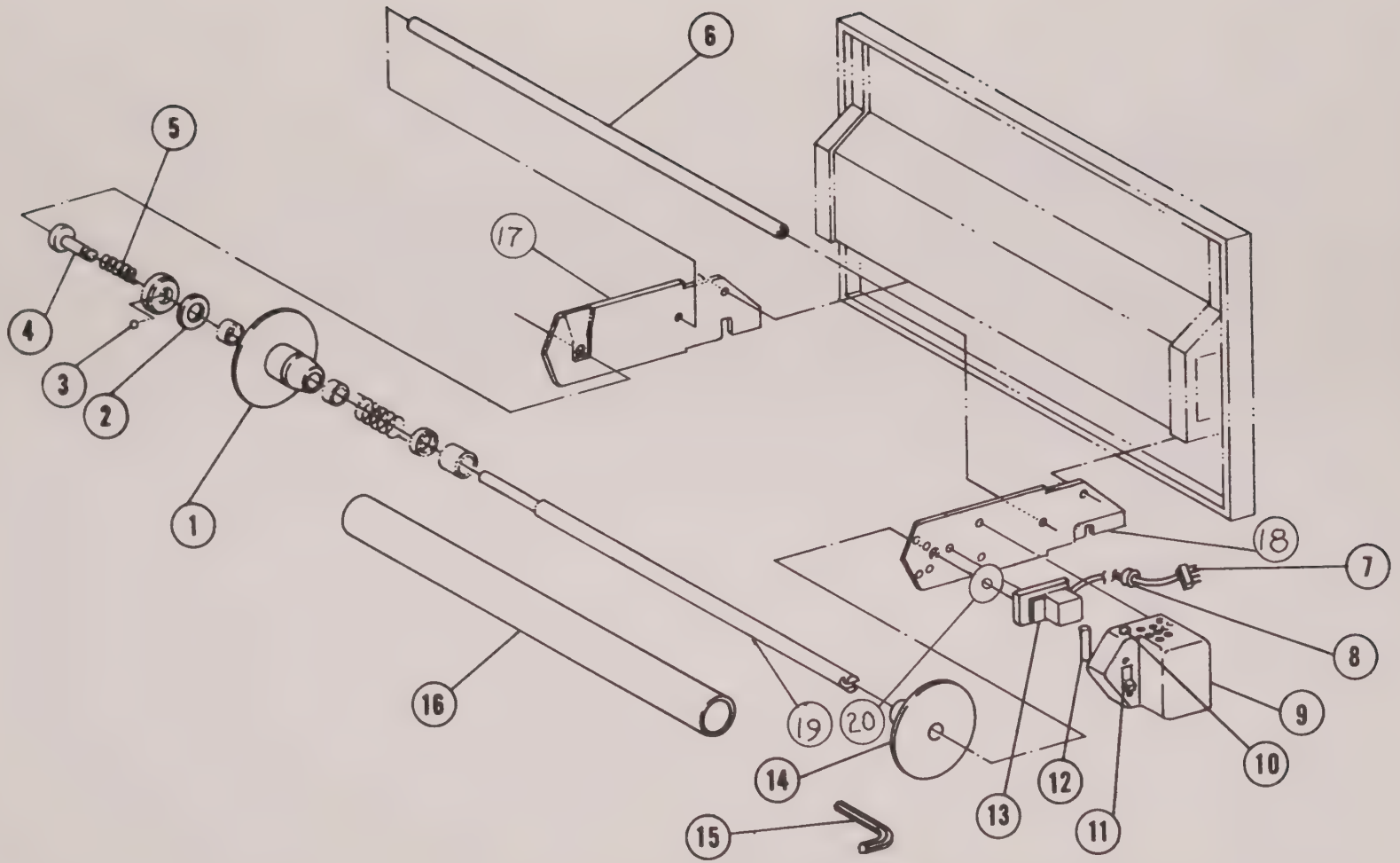

FIGURE 8-31 CHART TAKE-UP, MODEL 11-2402-41, -42

EXPLODED VIEW PARTS LIST
CHART TAKE UP ASSEMBLY MODEL 11-2402-50, -51
FIGURE 8-32

ITEM NO	PART NUMBER	DESCRIPTION	SYMBOL NO
1	249615-3	Arm, Take-up, Right	
2	646253	Shaft Asm, Take-up	
3	649619-3	Arm, Take-up, Left	
4	643858-10	Shaft Asm, Shouldered	
5	243738	Pulley, Driven	
6	243844-1	O Ring	
7	246256	Spring, Belt	
8	243688	Knob	
9	246306	Pulley, Nylon	
	14-119923-6205	Setscrew	
10	246651	Guide Roller	

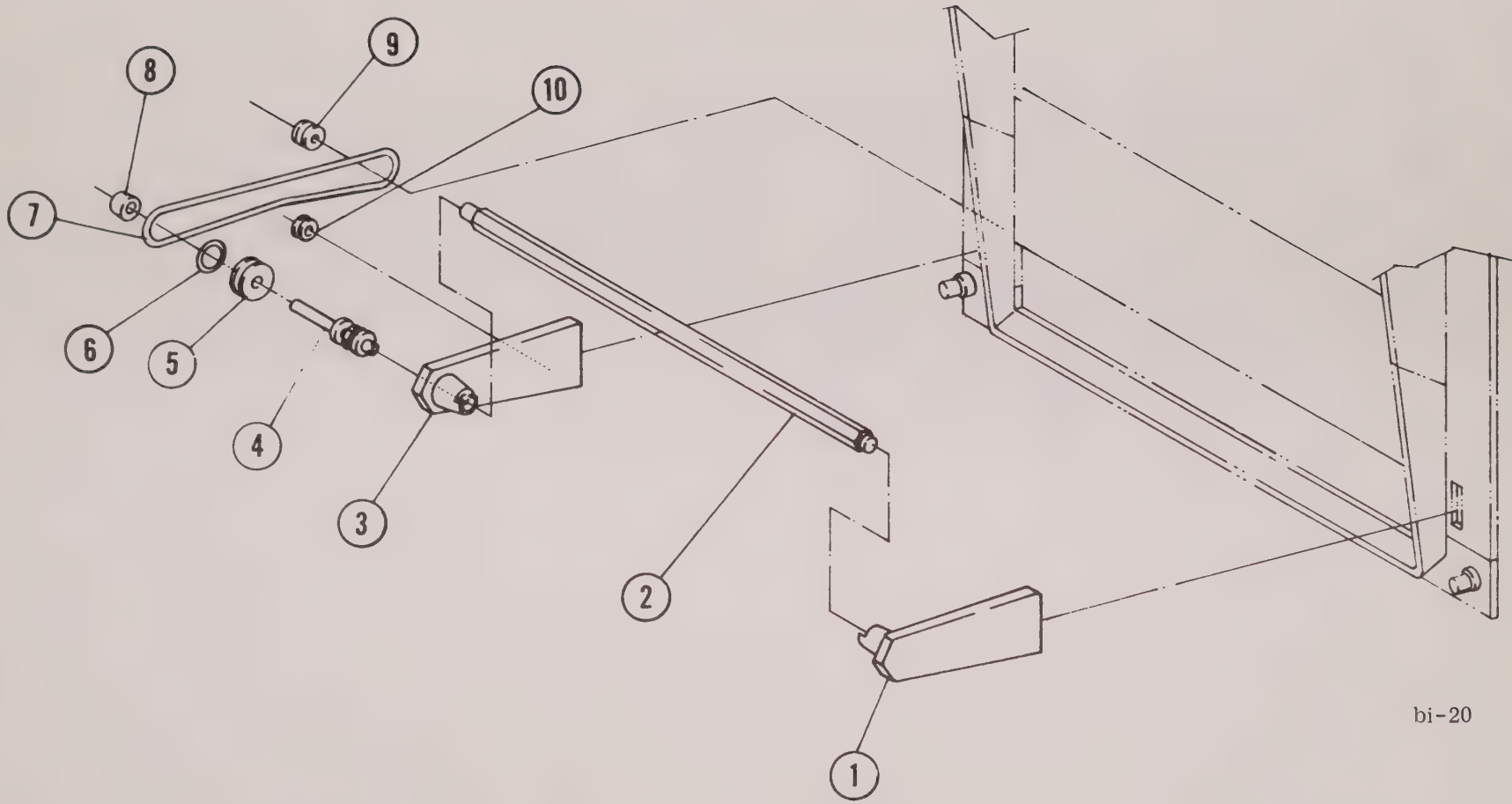

FIGURE 8-32 CHART TAKE-UP MODEL 11-2402-50, -51

EXPLODED VIEW PARTS LIST
CHART TAKEUP ASM MODEL 11-2402-61, -62
FIGURE 8-33

ITEM NO	PART NUMBER	DESCRIPTION
1	647002	Shaft Asm.
2	247001	Shaft
3	127903	Spring, Compression
4	241674-910	Plunger Asm.
5	441632	Support, Left
6	261051	Spacer, Threaded
7	441633	Support, Right
8	123108-32	Grommet
9	241712	Connector
10	231969	Switch, Push
11	240613	Switch, Slide
12	761061-1	Cover Asm.
13	243674-750	Resistor
14	647036	Motor Asm. (use item 15)
15	747033	Gearcase, Motor Asm.
*16	343700-10	Stator

*For 11-2402-62, replace stator in Item 14 with Item 16.

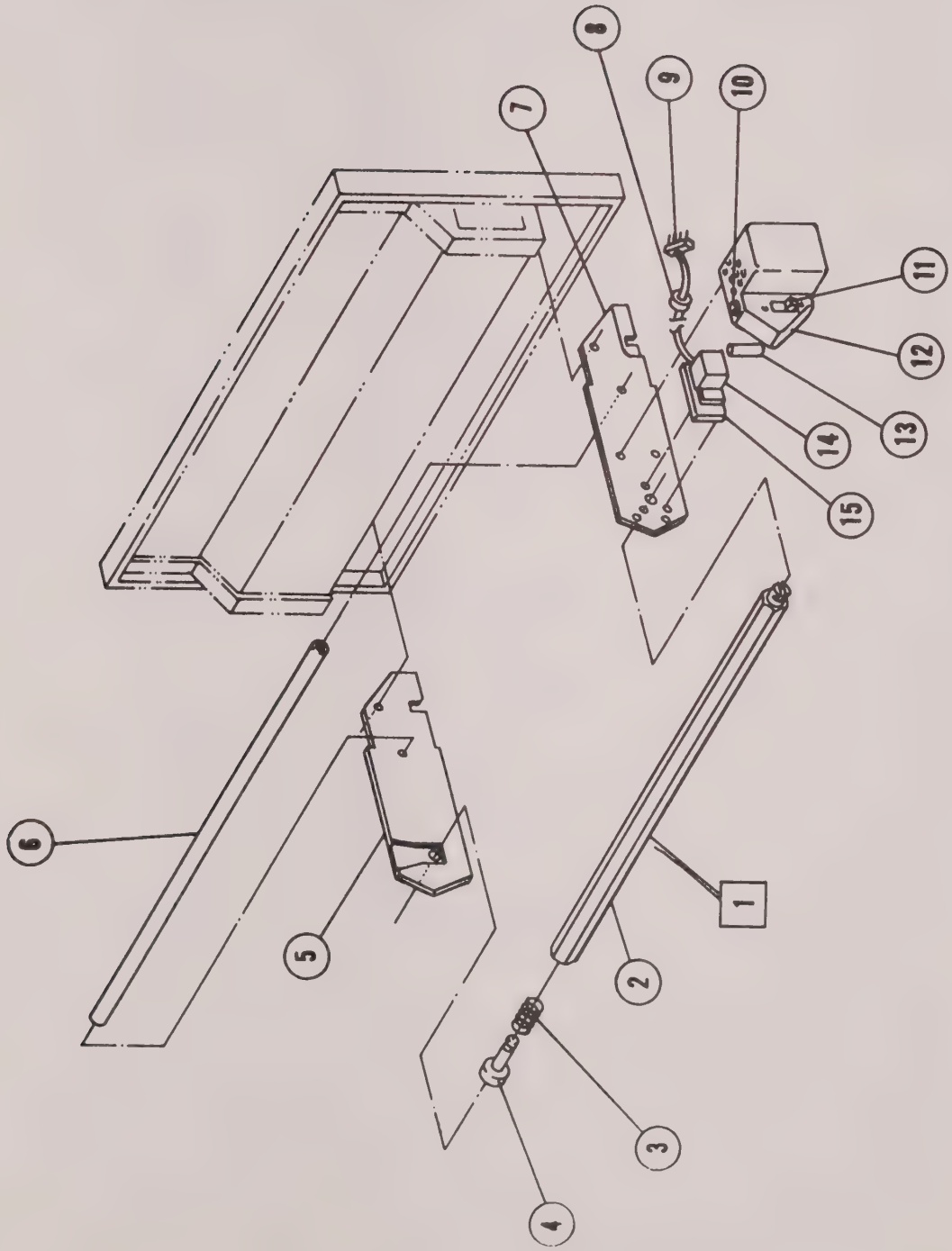

FIGURE 8-33 CHART TAKE UP, MODEL 11-2402-61, -62

EXPLODED VIEW PARTS LIST
PREAMPLIFIER FRAME ASM. MODEL 11-4588-13
FIGURE 8-34

ITEM NO	PART NUMBER	DESCRIPTION	SYMBOL NO
1	882126	Plate Asm., Feed Thru	
2	50-281858-1	Capacitor	C-25 thru C-80
3	232660-4	Clamp	
4	244810	Connector	J-125 thru J-132
5	882134	Harness Asm	
6	869811	Panel Subassy	
7	285313	Jack, Banana	J-109 thru J-116
8	232660-10	Clamp	
9	482099	Cover, Back	
10	241026-14	Terminal, Lug	
11	50-281858-1	Capacitor, Ceramic	C-1 thru C-24
12	123837	Connector, Recep, Female	J-1 thru J-8
13	882128	Plate Asm, Conn. Lower	
14	265840-1	Lug	
15	265814-14	Terminal Board	
16	241026-14	Lug	
17	1-247523-12	Plate, Ident.	
18	247280	Cable, Power	
19	882139	Plate Asm., Retaining	
20	241026-4	Terminal, Lug	
21	247364	Connector, Receptacle	J-9
22	281859	Filter, RF	FL-1
23	431949-910	Cabinet, Subassy	
24	11-107283-12	Rivet	
25	882130	Plate Asm., Conn., Upper	
26	243213	Pin, Shoulder headless	
27	231741	Shell	
28	231740	Shell	
29	231796	Insert, Modified	P-101 thru P-108
30	2-109024-3	Nut, Knurled Top	

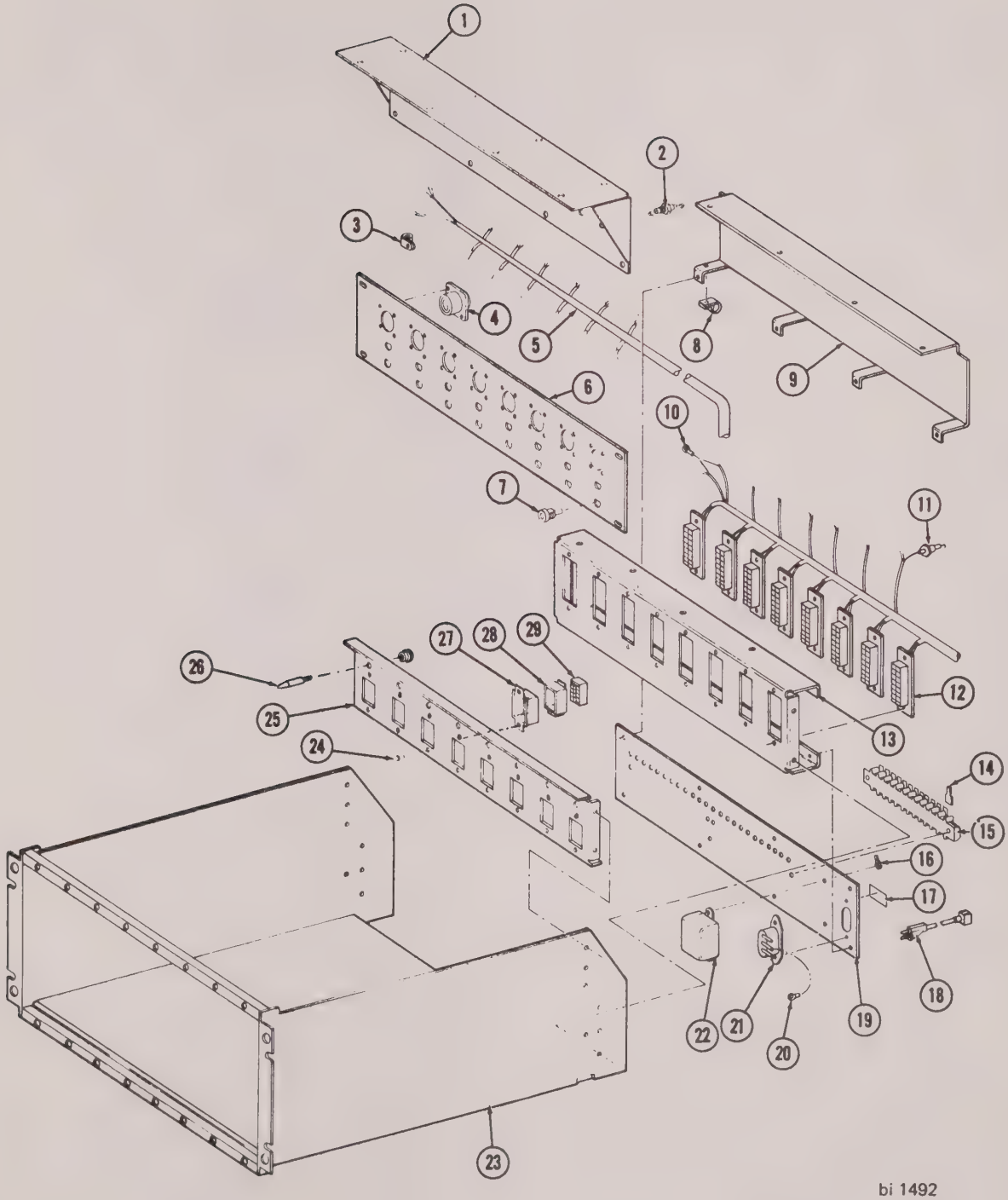

FIGURE 8-34 PREAMPLIFIER FRAME, MODEL 11-4588-13

EXPLODED VIEW PARTS LIST
PREAMPLIFIER FRAME ASM MODEL 11-4588-14
FIGURE 8-35

ITEM NO	PART NUMBER	DESCRIPTION	SYMBOL NO
1	243213	Pin, Shoulder—Headlines	
2	431944	Plate	
3	2-109024-3	Nut, Knurled Top—Round	
4	231741	Shell	
5	16-107283-12	Rivet	
6	231740	Shell	
7	231976	Insert Molded	
8	232660-10	Clamp, Loop	
9	265840-1	Term., Lug	
10	123837	Connector, Receptacle—Female	
11	431942-910	Nut Asm., Self-Locking Contact	
12	265840-2	Terminal, Lug	
13	267050-14	Terminal Board, Quick Disconn.	TB-1 & TB-2
14	232660-5	Clamp, Loop	
15	243192	Plate, Ident, Model No.	
16	247280	Cable, Power Elec.	
17	234670-3	Terminal, Lug	
18	247364	Connector, Receptacle, Elec. Male	
19	869438	Plate Asm.	
20	431949-910	Cabinet Subasm.	

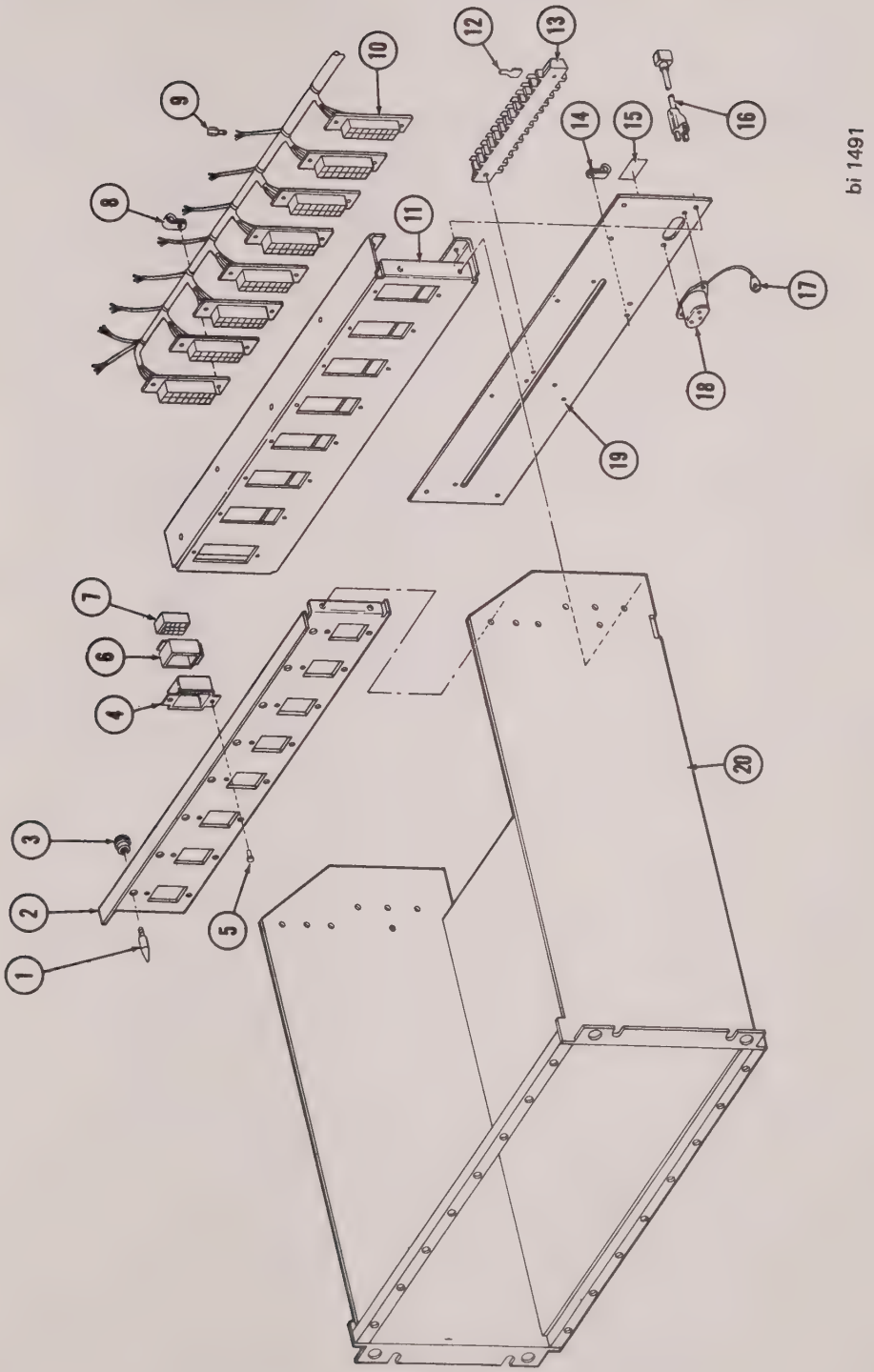

FIGURE 8-35 PREAMPLIFIER FRAME MODEL 11-4588-14

EXPLODED VIEW PARTS LIST
PREAMPLIFIER FRAME MODEL 11-4588-12
FIGURE 8-36

ITEM NO.	PART NO.	DESCRIPTION	SYMBOL
1	243213	Pin, Shoulder—Headless	
2	431944	Plate	
3	2-109024-3	Nut, Knurled Top—Round	
4	231741	Shell	
5	16-107283-12	Rivet	
6	231740	Shell	
7	231976	Insert Molded	
8	232660-10	Clamp, Loop	
9	265840-1	Term., Lug	
10	123837	Connector, Receptacle—Female	
11	431942-910	Nut ASM., Self-Locking Contact	
12	265840-2	Terminal, Lug	
13	267050-14	Terminal Board, Quick Disconn.	TB-1 & TB-2
14	232660-5	Clamp, Loop	
15	243192	Plate, Ident. Model No.	
16	247280	Cable, Power Elec.	
17	234670-3	Terminal, Lug	
18	247364	Connector, Receptacle, Elec. Male	
19	869438	Plate ASM.	
20	431949-910	Cabinet Subasm.	

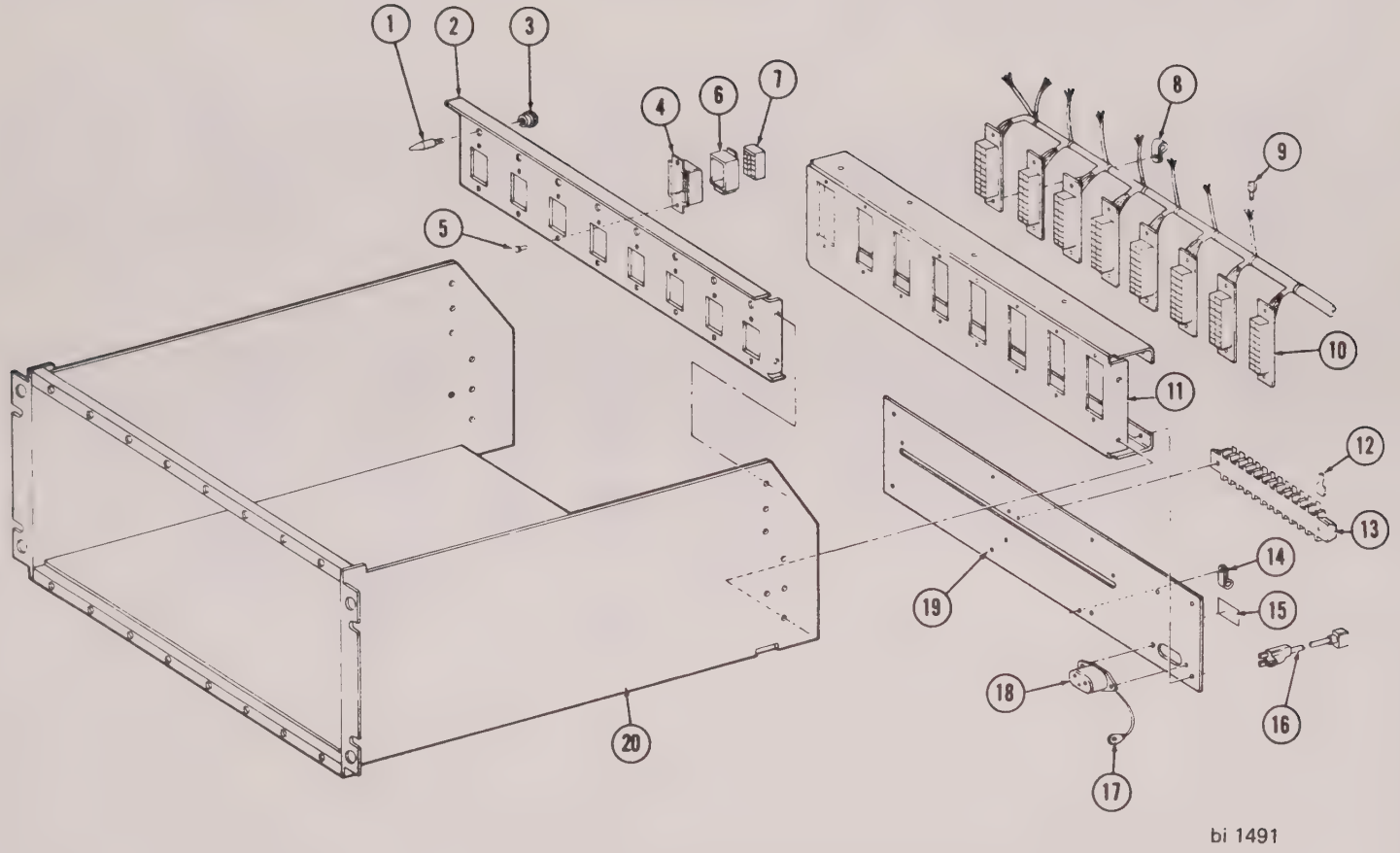

FIGURE 8-36 PREAMPLIFIER FRAME, MODEL 11-4588-12

ELECTRICAL PARTS LIST
DATA LOSS INDICATOR
MODEL 0000-1605-00

SYMBOL NO	PART NUMBER	DESCRIPTION
C-351	243006-305	Capacitor
C-352	243006-305	Capacitor
C-401	10-261998-824	Capacitor
CR-301	130198-1	Diode, 1N2069
CR-302	130198-1	Diode, 1N2069
CR-303	130198-1	Diode, 1N2069
CR-304	130198-1	Diode, 1N2069
CR-305	130198-1	Diode, 1N2069
CR-351	130198-1	Diode, 1N2069
CR-352	130198-1	Diode, 1N2069
CR-353	130198-1	Diode, 1N2069
CR-354	130198-1	Diode, 1N2069
CR-355	130198-1	Diode, 1N2069
CR-356	130198-1	Diode, 1N2069
CR-357	130198-1	Diode, 1N2069
DS-301	262635-1	Indicator, Panel Light
DS-302	263635-1	Indicator, Panel Light
DS-351	262635-3	Indicator, Panel Light
DS-352	262635-2	Indicator, Panel Light
J-195A	0-247923-15	Connector, Recept, Female
J-196A	0-247923-15	Connector, Recept, Female
J-197	58-262471-26	Connector
K-301	262185	Relay, D.C. SPDT
K-351	262185	Relay, D.C. SPDT
L-301	262147	Reactor, Audio Frequency
L-302	262147	Reactor, Audio Frequency
L-351	262147	Reactor, Audio Frequency
L-352	262147	Reactor, Audio Frequency
P-195	0-247924-15	Connector, Plug-Male
P-195A	0-247924-15	Connector, Plug-Male
P-196	0-247924-15	Connector, Plug-Male
P-196A	0-247924-15	Connector, Plug-Male
P-197	57-262470-26	Connector (Mates w/J-197)
R-301	5-115557-470	Resistor, Fixed
R-302	30-262148-502	Resistor, Variable
R-351	5-115557-470	Resistor, Fixed
R-352	30-262148-502	Resistor, Variable
R-353	5-115557-222	Resistor, Fixed
R-354	5-115557-222	Resistor, Fixed
S-401	249889	Switch, Push
TB-411	2-112429-10	Terminal Board

ELECTRICAL PARTS LIST
INTERCHANNEL EVENT MARKER KIT
MODELS 11-2221-00, -01

SYMBOL NO	PART NUMBER	DESCRIPTION
CR-761 Thru CR-764	231887	Diode
J-5A	241966	Connector (used on horizontal oscillograph)
J-762	130168	Connector
J-763	130168	Connector
J-764	130168	Connector
J-765*	130168	Connector
J-766*	130168	Connector
J-767*	130168	Connector
J-768*	130168	Connector
J-770	241514	Connector
P-5	122104	Connector (used on horizontal oscillograph)
P-770	241515	Connector (used on horizontal oscillograph)

*used on Kit 11-2221-00

SECTION IX

This section contains schematic and wiring diagrams for all equipment in the Gould 200 Recording System except for preamplifiers.

SCHEMATIC	DESCRIPTION	MODEL
448370	Horizontal Oscillograph	0000-2607-60, -65
448345	Vertical Oscillograph	0000-2607-70, -75
448400	Drive Assembly	0000-5540-00
448320	Relay Chassis Assy	0000-5540-00
448144	Drive Amplifier	15-5221-11
448145	Drive Amplifier	15-5221-21
446263	8 Channel Multimarker Amplifier	13-5281-01, -02, -03
448401	80MM Harness Assembly	11-2291-00
448402	40MM Harness Assembly	11-2292-00
448408	Multimarker Harness Assembly	11-2298-00
263328	Data Loss Relay Assembly	0000-1605-00
262352	Amplifier Calibration Unit	0000-5403-20
445000	Calibration Unit Relay Assy	11-5403-10
448080	Main Connector Panel	11-1601-11
444120	System Power Panel	11-1603-10
483944	Main Connector Panel (Medical Version)	11-1601-11813, -11817
383259	Medical Standard Changes	0000-1707-4XX, -5XX
262388	Interchannel Event Marker Kit	11-2221-00, -01
282140	Preamp Frame Assembly	11-4588-13
469437	Preamp Frame Assembly	11-4588-12

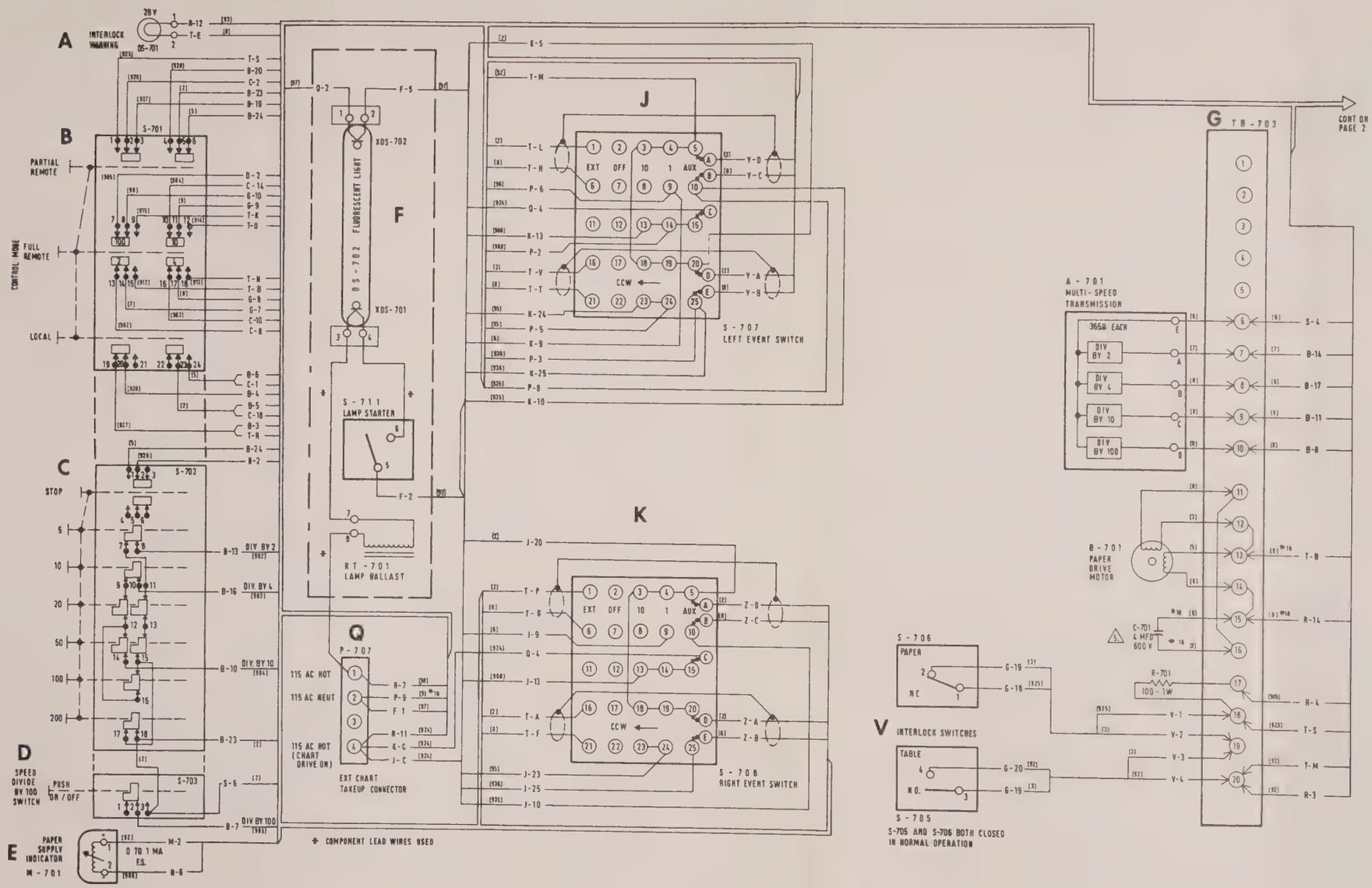

NOTES:

1 UNLESS OTHERWISE INDICATED:
ALL CAPACITANCE IN MICROFARADS,
ALL RESISTANCE IN OHMS,
ALL RESISTORS 1/2 WATT,
ALL WIRES #22 AWG.

2. WIRE COLORS IN EIA CODE SHOWN IN BRACKETS.

3. OPEN ARROW AT TERMINAL DENOTES PIN OR LUG TERMINATION.

⚠ FIRST 4 DIGITS DEPEND ON PERMOTOR COMBINATION USED.

⚠ C-701 INCREASED TO 8 MFD FOR 0000-2607-65 (50~VERSION)

BY	DATE	NAME
DR. Lowal	10/13/64	DIAGRAM, WIRING
CH.	12/2/64	MODEL NO.: 0000-2607-60, -65
APP.	12/17/64	CODE IDENT. / ISSUE CODE G

DWG. NO. 448370

PAGE 1 OF 2

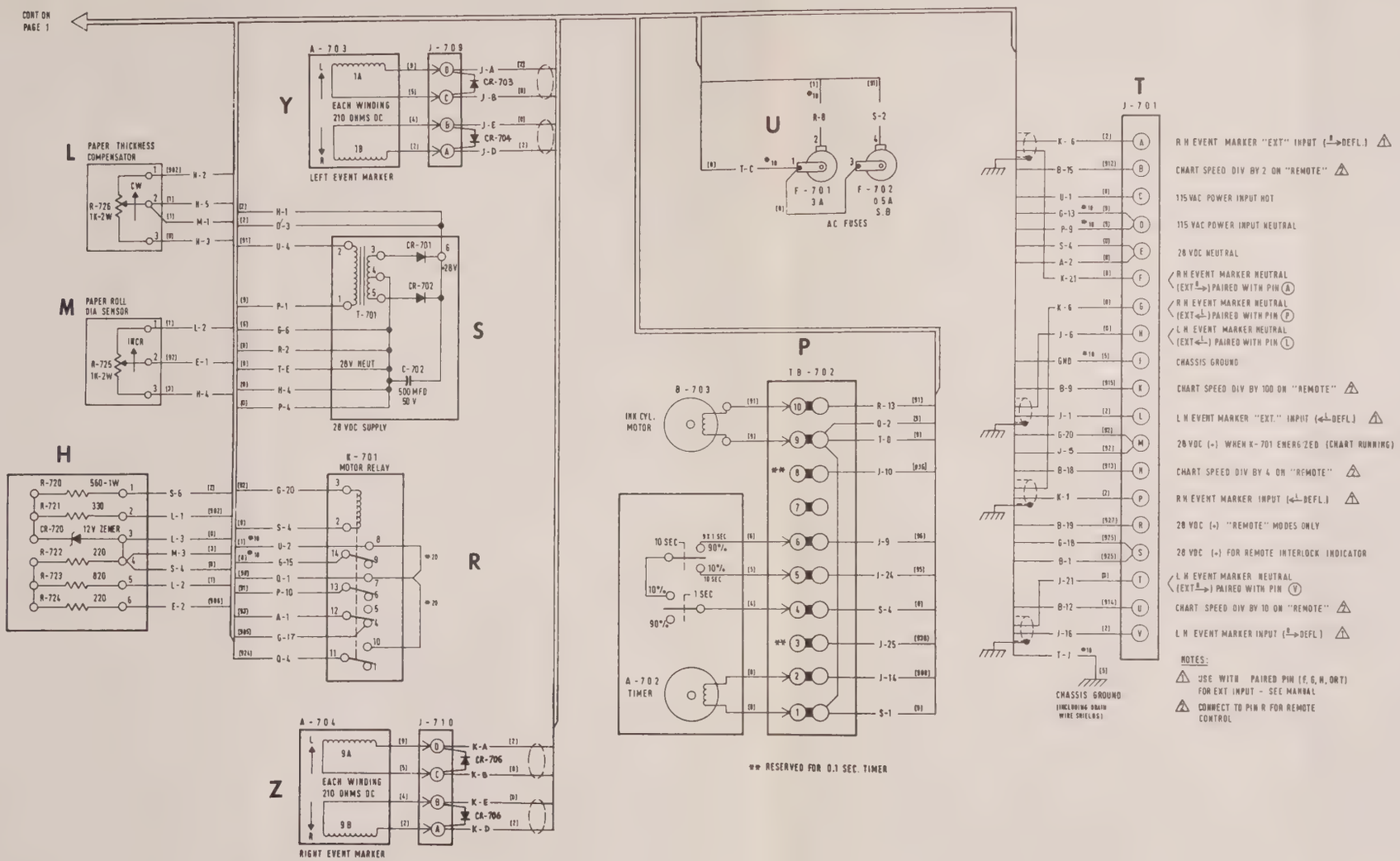

BY	DATE	NAME	
DR Lowat	10/13/64	DIAGRAM, WIRING	
CH. [illegible]	5/22/64	MODEL NO.: 0000-2607-60-65	DWG. NO. 448370
APP. [illegible]	10/19/64	CODE IDENT. / ISSUE CODE G	PAGE 2 OF 2

Information contained herein is considered proprietary to GOULD INC., INSTRUMENT SYSTEMS DIVISION. Release of this information is to facilitate the servicing and maintenance of Gould equipment only.

Under no circumstances shall this information be transmitted, reproduced, disclosed to, or used by any person or organization other than those engaged in such activities without the express written consent of GOULD INC., INSTRUMENT SYSTEMS DIVISION

REV E-2

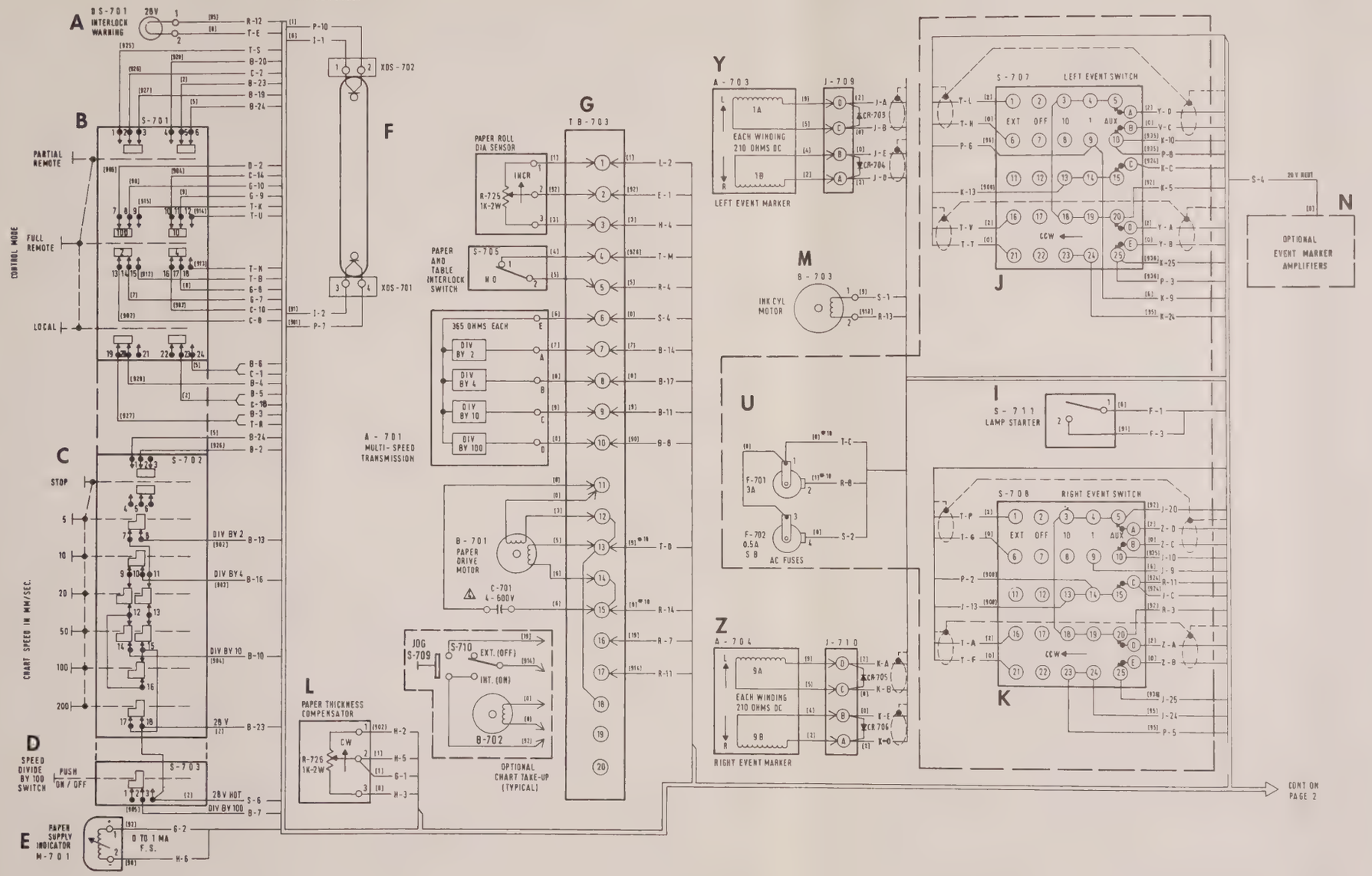

1 UNLESS OTHERWISE INDICATED:
ALL CAPACITANCE IN MICROFARADS
ALL RESISTANCE IN OHMS
ALL RESISTORS 1/2 WATT
ALL WIRES 22 AWG

NOTES.

3 OPEN ARROW AT TERMINAL INDICATES PIN OR LUG TERMINATION

2. WIRE COLORS IN EIA CODE SHOWN IN BRACKETS

△ FOR MODEL NO.: 0000-2607-75 (50CPS) C-701 IS 8MFD-330 VAC

Gould Inc.
Instrument Systems Division
Cleveland, Ohio 44114 U.S.A.

BY	DATE	NAME	
DR Lowak	9/22/64	DIAGRAM, WIRING MODEL NO.: 0000-2607-70, -75	
CH.			
APP F.P. Zeffarano	9/20/64	CODE IDENT. 96795	ISSUE CODE G

DWG. NO. 448345

PAGE 1 OF 2

Information contained herein is considered proprietary to GOULD INC., INSTRUMENT SYSTEMS DIVISION Release of this information is to facilitate the servicing and maintenance of Gould equipment only

Under no circumstances shall this information be transmitted, reproduced, disclosed to, or used by any person or organization other than those engaged in such activities without the express written consent of GOULD INC., INSTRUMENT SYSTEMS DIVISION

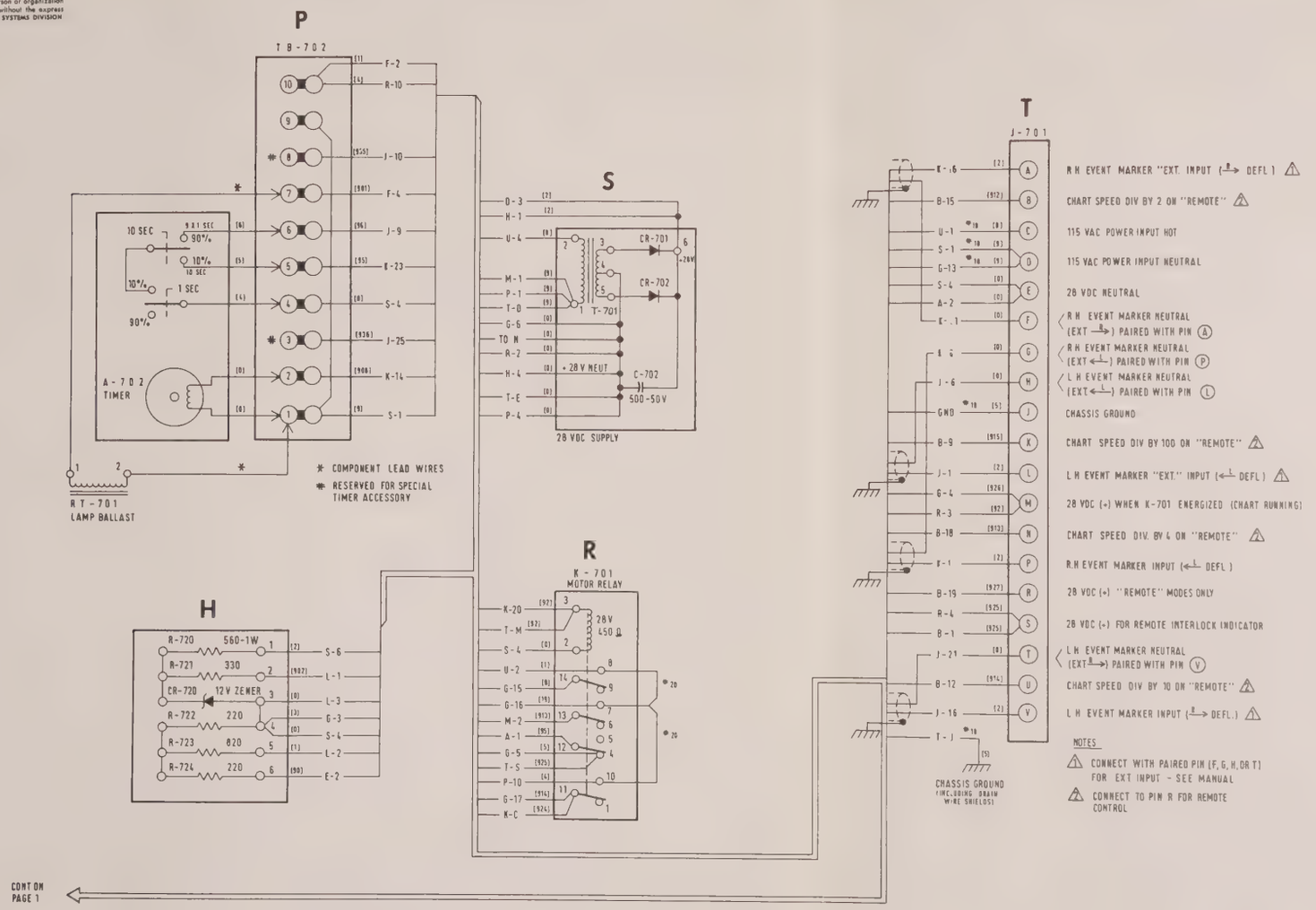

Gould Inc.
Instrument Systems Division
Cleveland, Ohio 44114 U.S.A.

BY	DATE	NAME
DR Gould	9/22/66	DIAGRAM, WIRING
CH.		MODEL NO.: 0000-2607-70,-75
APP	9/23/66	DWG. NO. 448345
CODE IDENT: 96795	ISSUE CODE G	PAGE 2 OF 2

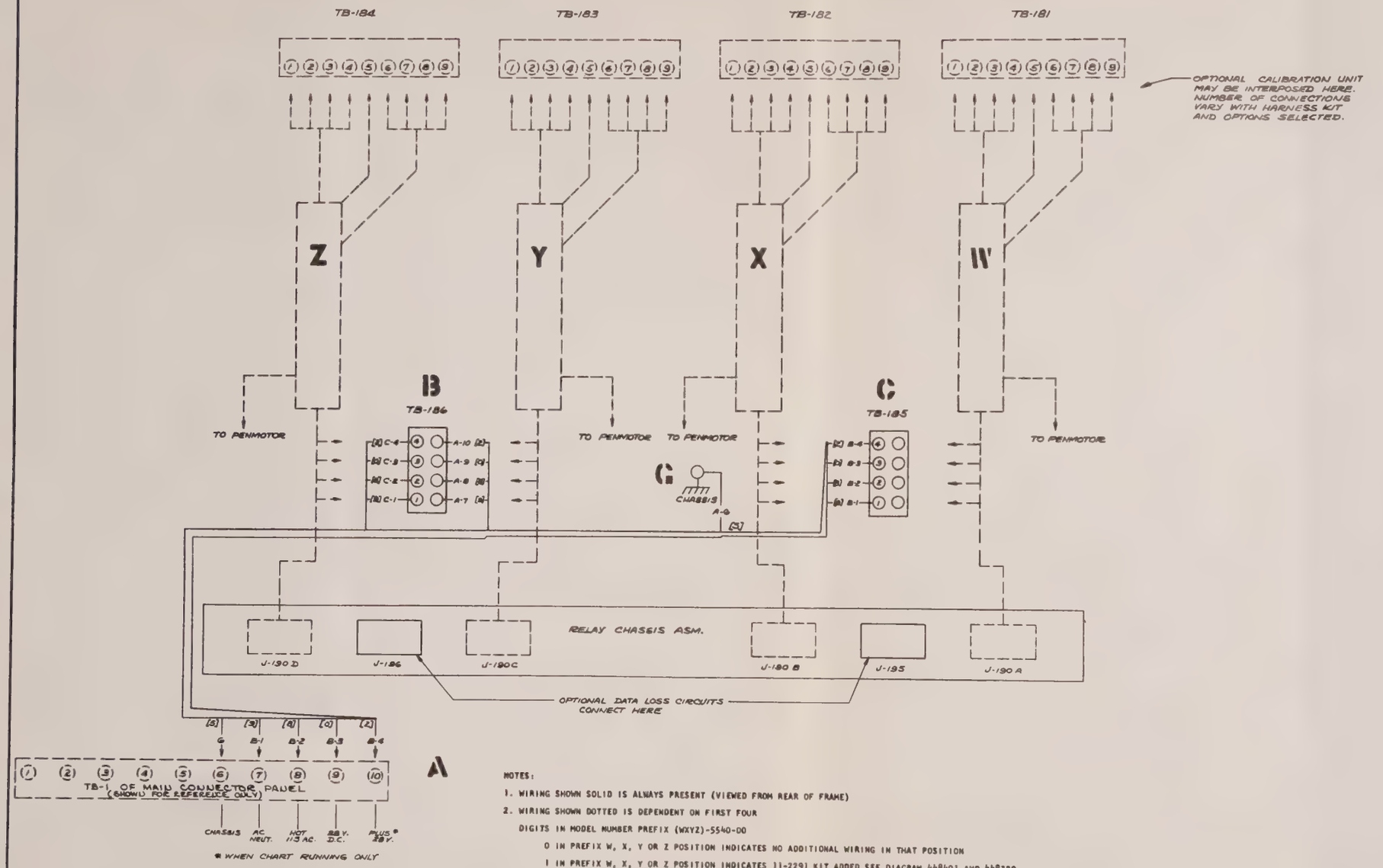

NOTES:

1. WIRING SHOWN SOLID IS ALWAYS PRESENT (VIEWED FROM REAR OF FRAME)
2. WIRING SHOWN DOTTED IS DEPENDENT ON FIRST FOUR DIGITS IN MODEL NUMBER PREFIX (WXYZ)-5540-00
   - 0 IN PREFIX W, X, Y OR Z POSITION INDICATES NO ADDITIONAL WIRING IN THAT POSITION
   - 1 IN PREFIX W, X, Y OR Z POSITION INDICATES 11-2291 KIT ADDED SEE DIAGRAM 448401 AND 448320
   - 2 IN PREFIX W, X, Y OR Z POSITION INDICATES 11-2292 KIT ADDED SEE DIAGRAM 448402 AND 448320
   - 3 IN PREFIX W, X, Y OR Z POSITION INDICATES 11-2298 KIT ADDED SEE DIAGRAM 448408 AND 448320

REQD	ITEM	PART NUMBER	DESCRIPTION	REMARKS

LIST OF MATERIAL

UNLESS OTHERWISE SPECIFIED DIMENSIONS ARE IN INCHES TOLERANCES .XX = ± .019 .XXX = ± .005 ANGLES = ± ½° SURFACE = √

MATL.

ADD FIN.

FIRST USE

	BY	DATE
DR.	[signature]	9/29/64
CH.		
APP.	[signature]	9/29/64

NAME: DIAGRAM, WIRING DRIVE ASM. MODEL NO. 0000-5540-00

CODE IDENT.

ISSUE CODE G

SCALE NONE

DWG. NO. 448400

5

REV A-1

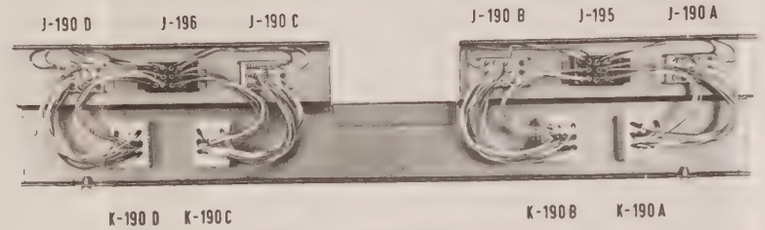

COMPLETE TYPICAL ASSEMBLY
(WITH ALL FOUR RELAY POSITIONS OCCUPIED)

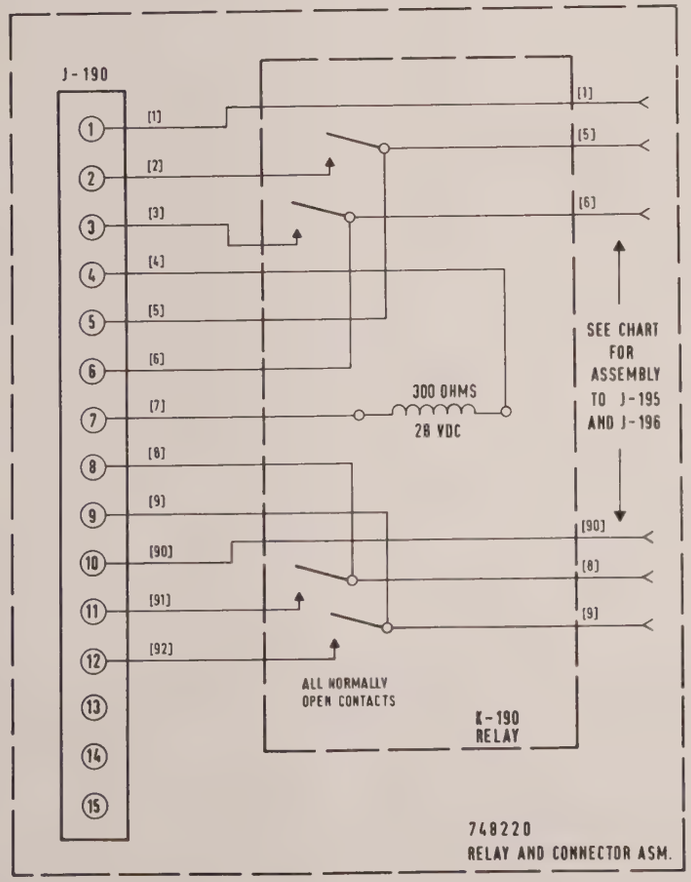

748220
RELAY AND CONNECTOR ASM.

RELAY ASM.
CONNECTIONS TO J-195 OR J-196
DEPEND ON WHETHER RELAY ASM.
IS PLACED IN POSITION A, B, C, OR D
AS FOLLOWS:

RELAY ASSEMBLY WIRE COLOR	PIN CONNECTIONS FOR J-195 FROM A	FOR J-195 FROM B	FOR J-196 FROM C	FOR J-196 FROM D
[1] *	7	1	7	1
[5]	8	2	8	2
[6]	9	3	9	3
[90] *	10	4	10	4
[8]	11	5	11	5
[9]	12	6	12	6

* JUMPER BETWEEN CONNECTORS ONLY

WIRING SIDE VIEW
OF CONNECTORS
J-190 A, B, C, D
J-195 AND J-196
(FEMALE CONNECTORS)

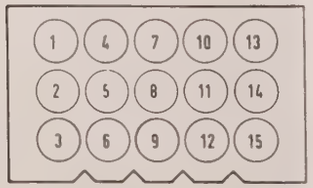

NOTES:
1. NUMBERS IN BRACKETS [ ] ARE EIA WIRE COLORS.

BY	DATE	NAME	
DR Lowal	9/15/64	DIAGRAM, WIRING RELAY CHASSIS ASM. MODEL NO.: 0000-5540-00	DWG. NO. 448320
CH		CODE IDENT.	ISSUE CODE G
APP F.V. Gofferano	9/26/64		

6

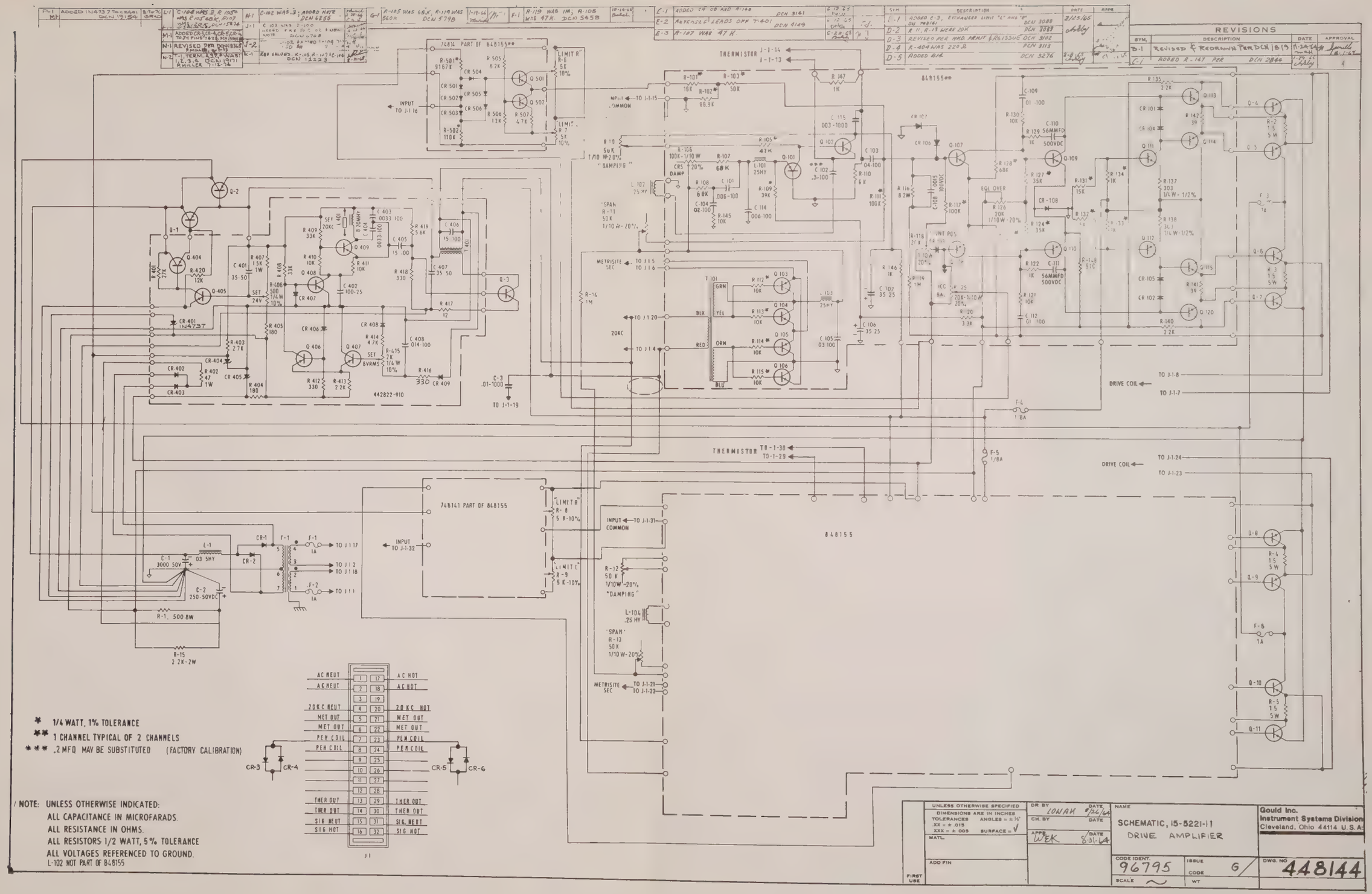
REVISIONS
SYM | DESCRIPTION | DATE | APPROVAL
D-1 REVISED & REDRAWN PER DCN 1813
C-1 ADDED R-147 PER DCN 2844
D-2 R 11, R-13 WERE 20K DCN 3088
D-3 REVISED PER MFG PART & RELEASED DCN 3102
D-4 R-404 WAS 220Ω DCN 3113
D-5 ADDED R14 DCN 3276
E-1 ADDED CR 108 AND R-148 DCN 3161
E-2 REVERSED LEADS OFF T-401 DCN 4149
E-3 R-107 WAS 47 K.
F-1 R-119 WAS 1M; R-105 WAS 47K. DCN 5458
G-1 R-105 WAS 68K, R-119 WAS 560K DCN 5798
H-1 C-102 WAS 3; ADDED NOTE DCN 6858
J-1 C 102 WAS 2-100 ADDED PART NO. & NOTE DCN 6708
J-2 REVISED PER DCN 8362
K-1 R20 VALUED, K-105, R-119, C-116 DCN 12223
L-1 C-108 WAS 2 R 105 WAS R 105 68K, R107 WAS 82K, DCN 15814
M-1 ADDED CR3, CR-4, CR-5, CR-6 TO J1 PINS 7&23, DCN 15906
N-1 REVISED PER DCN 18362
N-2 T-1 TERMINALS 2, 3, 5, 6 WERE 1, 2, 3, 5 DCN 19171
P-1 ADDED IN4737 TO CR401 DCN 19154
R-1 C-102 WAS 2 R 105 WAS R 105 68K, R107 WAS 82K, DCN 15814
S-1 ADDED CR 108 DCN 20708
T-1 ADDED R-148 DCN 21913
U-1 ADDED CR 109 DCN 22525
V-1 ADDED CR 110 DCN 23214
W-1 ADDED CR 111 DCN 23214
X-1 ADDED CR 112 DCN 23214
Y-1 ADDED CR 113 DCN 23214
Z-1 ADDED CR 114 DCN 23214
A-2 ADDED CR 115 DCN 23214
B-2 ADDED CR 116 DCN 23214
C-2 ADDED CR 117 DCN 23214
D-2 ADDED CR 118 DCN 23214
E-2 ADDED CR 119 DCN 23214
F-2 ADDED CR 120 DCN 23214
7414 PART OF 848155**
748141 PART OF 848155
848155**
848155
442822-910
INPUT TO J-1-16
INPUT COMMON TO J-1-15
LIMIT R R-8 5K 10%
LIMIT L R-7 5K 10%
THERMISTOR J-1-14 J-1-13
R-101 18K
R-102 68.9K
R-103 50K
R 147 1K
C-109 .01 100
C-110 56MMFD 500VDC
C-111 56MMFD 500VDC
R 135 2.7K
R 142 39
R 143 39
R 137 303 1/4W-1/2%
R 138 30.3 1/4W-1/2%
R 140 2.2K
R 148 910
R 130 10K
R 129 1K
R 128 68K
R 127 35K
R 131 15K
R 134 1K
R 132 4K
R 122 1K
R 124 35K
R 121 10K
R 116 8.2M
R 118 27K
R 119 1M
R 120 3.3K
R 146 1K
C 107 35 25
C 106 35 25
C 105 .03 100
C 103 .04 100
C 102 .3-100
C 101 .006-100
C 104 .02-100
C 108 1000 VDC
C 112 .01 100
C 115 .003-1000
R 110 6K
R 111 100K
R 105 47K
R 106 100K-1/10W
R 107 68K
R 108 68K
R 109 39K
R 145 10K
R 114 10K
R 115 10K
R 112 10K
R 113 10K
R 117 100K
R 10 5 K 1/10 W-20% "DAMPING"
R-11 50K 1/10 W-20% "SPAN"
R-12 50 K 1/10W-20% "DAMPING"
R-13 50 K 1/10 W-20% "SPAN"
R-14 1M
R-15 2.2K-2W
R-1, 500 8W
L-101 25MH
L-102 25 MH
L-104 .25 HY
T 101
T 401
T-1
L-1 .03 SHY
C-1 3000 50V
C-2 250-50VDC
C-3 .01-1000
CR-1
CR-2
CR-3
CR-4
CR-5
CR-6
CR 101
CR 102
CR 103
CR 104
CR 105
CR 106
CR 107
CR 108
CR 109
CR 110
CR 111
CR 112
CR 113
CR 114
CR 115
CR 116
CR 117
CR 118
CR 119
CR 120
CR-401 IN4737
CR 402
CR 403
CR 404
CR 405
CR 406
CR 407
CR 408
CR 409
R 401 27K
R 402 47 1W
R 403 2.7K
R 404 180
R 405 180
R 406 500 1/4W 10%
R 407 1.5K 1W
R 408 33K
R 409 33K
R 410 10K
R 411 10K
R 412 330
R 413 2.2K
R 414 4.7K
R 415 2K 1/4W 10%
R 416 330
R 417 12
R 418 330
R 419 5.6K
R 420 12K
R 501 9.67K
R 502 110K
R 504
R 505 82K
R 506 12K
R 507 4.7K
Q 501
Q 502
Q 101
Q 102
Q 103
Q 104
Q 105
Q 106
Q 107
Q 108
Q 109
Q 110
Q 111
Q 112
Q 113
Q 114
Q 115
Q 120
Q-1
Q-2
Q-3
Q-4
Q-5
Q-6
Q-7
Q-8
Q-9
Q-10
Q-11
Q 404
Q-405
Q 406
Q 407
Q 408
Q 409
SET 20KC
SET 24V
SET 8VRMS
F-1 1A
F-2 1A
F-3 1A
F-4 1/8A
F-5 1/8A
F-6 1A
F-7 1/8A
THERMISTOR TO J-1-30 TO J-1-29
DRIVE COIL TO J-1-8 TO J-1-7
DRIVE COIL TO J-1-24 TO J-1-23
TO J-1-19
TO J-1-20
TO J-1-14
TO J-1-15
TO J-1-16
TO J-1-31
TO J-1-32
TO J-1-21
TO J-1-22
TO J 1 17
TO J 1 2
TO J 1 16
TO J 1 1
METRISITE SEC
20KC
BLK
YEL
ORN
RED
GRN
BLU
AC NEUT 1 17 AC HOT
AC NEUT 2 18 AC HOT
3 19
20KC NEUT 4 20 20KC HOT
MET OUT 5 21 MET OUT
MET OUT 6 22 MET OUT
PEN COIL 7 23 PEN COIL
PEN COIL 8 24 PEN COIL
9 25
10 26
11 27
12 28
THER OUT 13 29 THER OUT
THER OUT 14 30 THER OUT
SIG NEUT 15 31 SIG NEUT
SIG HOT 16 32 SIG HOT
J1
* 1/4 WATT, 1% TOLERANCE
** 1 CHANNEL TYPICAL OF 2 CHANNELS
*** .2 MFD MAY BE SUBSTITUTED (FACTORY CALIBRATION)
NOTE: UNLESS OTHERWISE INDICATED:
ALL CAPACITANCE IN MICROFARADS.
ALL RESISTANCE IN OHMS.
ALL RESISTORS 1/2 WATT, 5% TOLERANCE
ALL VOLTAGES REFERENCED TO GROUND.
L-102 NOT PART OF 848155
UNLESS OTHERWISE SPECIFIED
DIMENSIONS ARE IN INCHES
TOLERANCES ANGLES = ± ½°
.XX = ± .015
.XXX = ± .005
SURFACE = √
MATL
ADD FIN
FIRST USE
DR BY LOWAK DATE 8/21/64
CH. BY DATE
APP'D WEK DATE 8-31-64
NAME
SCHEMATIC, 15-5221-11
DRIVE AMPLIFIER
Gould Inc.
Instrument Systems Division
Cleveland, Ohio 44114 U.S.A.
CODE IDENT. 96795
ISSUE CODE G
SCALE ~
WT
DWG. NO 448144

7

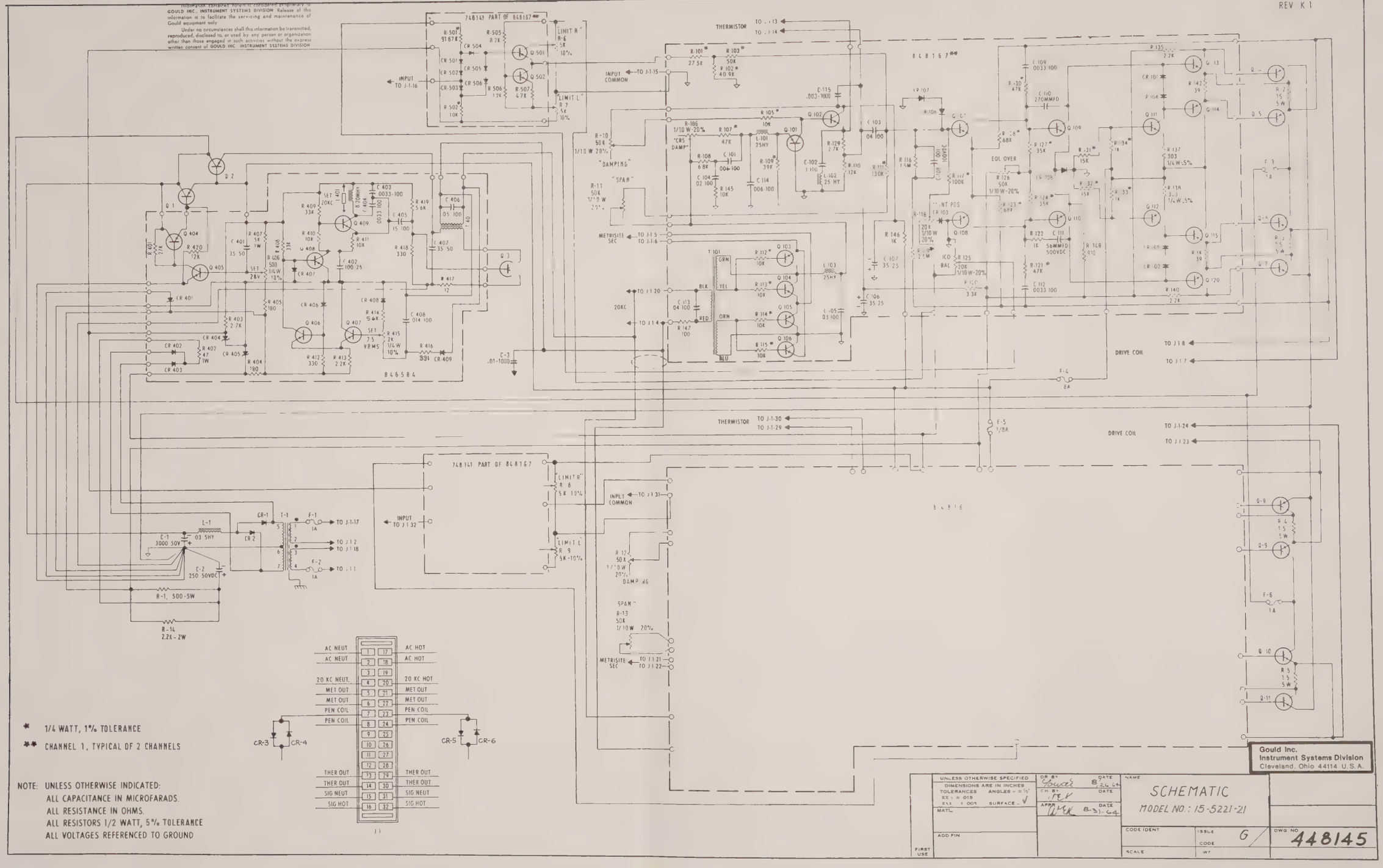
REV K 1
748141 PART OF 848167
THERMISTOR
INPUT COMMON
"DAMPING"
"SPAN"
METRISITE SEC
EQL OVER
DRIVE COIL
846584
848167
AC NEUT
AC HOT
20 KC NEUT.
20 KC HOT
MET OUT
PEN COIL
THER OUT
SIG NEUT
SIG HOT
CR-3
CR-4
CR-5
CR-6
J1
* 1/4 WATT, 1% TOLERANCE
** CHANNEL 1, TYPICAL OF 2 CHANNELS
NOTE: UNLESS OTHERWISE INDICATED:
ALL CAPACITANCE IN MICROFARADS.
ALL RESISTANCE IN OHMS.
ALL RESISTORS 1/2 WATT, 5% TOLERANCE
ALL VOLTAGES REFERENCED TO GROUND
Gould Inc.
Instrument Systems Division
Cleveland, Ohio 44114 U.S.A.
UNLESS OTHERWISE SPECIFIED
DIMENSIONS ARE IN INCHES
TOLERANCES
ANGLES = ± 1/2°
XX = ± .015
XXX = ± .005
SURFACE - √
MATL
ADD FIN
FIRST USE
DR BY
DATE 8/26/64
CH BY
DATE
APPR
DATE 8-31-64
NAME
SCHEMATIC
MODEL NO.: 15-5221-21
CODE IDENT
ISSUE
CODE
G
SCALE
WT
DWG NO
448145

8

REV L 3

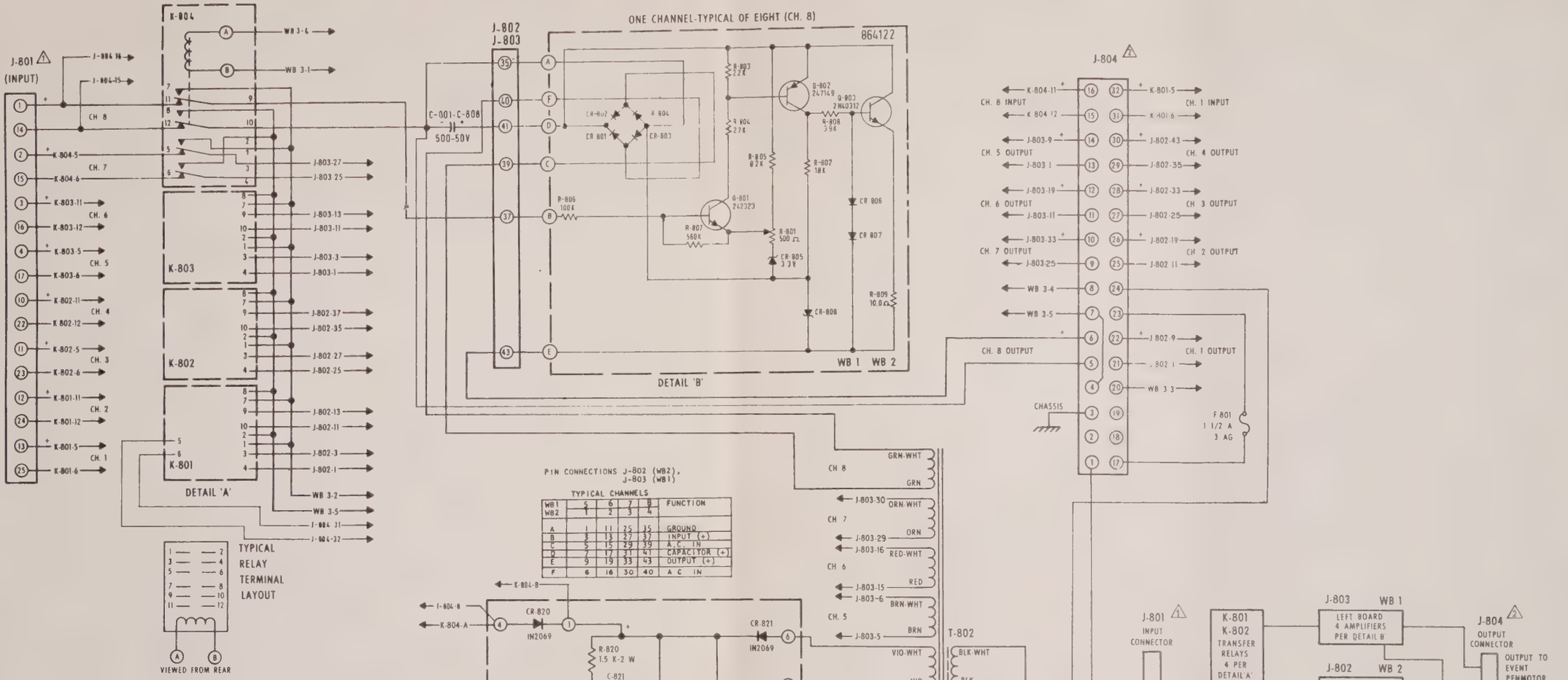

WB1 / WB2	5 / 1	6 / 2	7 / 3	8 / 4	FUNCTION
A	1	11	25	35	GROUND
B	3	13	27	37	INPUT (+)
C	5	15	29	39	A.C. IN
D	7	17	31	41	CAPACITOR (+)
E	9	19	33	43	OUTPUT (+)
F	6	16	30	40	A C IN

⚠ MATES WITH BRUSH PT NO 232866

⚠ SEE DWG NO 446326 FOR MATING CONNECTOR P-721, P-722, P-723 OR P-724 FOR EACH SET OF CHANNELS

3 WHEN THE SCHEMATIC IS USED IN CONJUNCTION WITH MODEL (13-5281-02) WHICH IS A 230 V/50,60 CYCLE MODEL, THE PRIMARY OF TRANSFORMER T-801 AND T-802 ARE WIRED IN SERIES INSTEAD OF PARALLEL.

RELAY TERMINAL NUMBER	RELAY K-801	K-802	K-803	K-804
1	K-802-1	K-803-1	K-804-1	WB 3-2
2	K-802-2	K-803-2	K-804-2	WB 3-5
3	J-802-3	J-802-27	J-803-3	J-803-27
4	J-802-1	J-802-25	J-803-1	J-803-25
5	J-801-13	J-801-11	J-801-4	J-801-2
6	J-801-25	J-801-23	J-801-17	J-801-15
7	J-802-7	K-803-7	K-804-7	K-804-1
8	K-802-8	K-803-8	K-804-8	K-804-2
9	J-802-13	J-802-37	J-803-13	J-803-37
10	J-802-11	J-802-35	J-803-11	J-803-35
11	J-801-12	J-801-10	J-801-3	J-801-1
12	J-801-24	J-801-22	J-801-16	J-801-14
A	K-802-A	K-803-A	K-804-A	WB 3-4
B	K-802-B	K-803-B	K-804-B	WB 3-1

NOTE:
UNLESS OTHERWISE INDICATED:
ALL CAPACITANCE IN MICROFARADS.
ALL RESISTANCE IN OHMS.
ALL RESISTORS 1/2 WATT.

REQD	ITEM	PART NUMBER	DESCRIPTION	REMARKS	CHL

LIST OF MATERIAL

UNLESS OTHERWISE SPECIFIED
DIMENSIONS ARE IN INCHES
TOLERANCES ANGLES = ± ½°
.XX = ± .015
.XXX = ± .008 SURFACE = √
MATL.
ADD FIN.
FIRST USE

	BY	DATE
DR.	GNF	3/3/64
CH		
APP.	LITTLE	3/5/64

NAME: SCHEMATIC
8 CHANNEL EVENT AMPLIFIER
MODEL NO: 13-5281-00
13-5281-01
13-5281-02

CODE IDENT. | ISSUE CODE: G | DWG. NO. 446263
SCALE ~

9

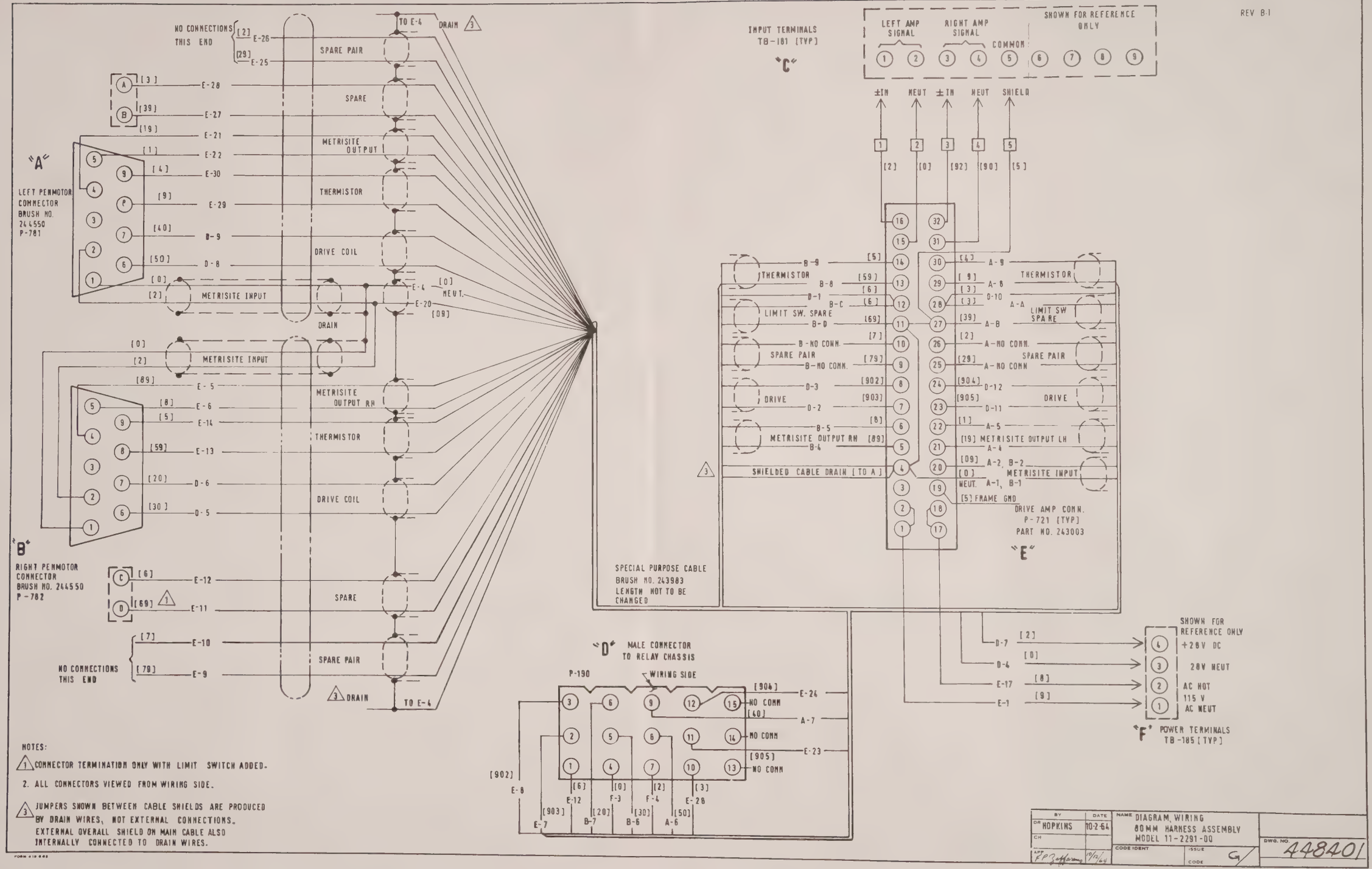
REV B-1
"A"
LEFT PENMOTOR CONNECTOR BRUSH NO. 244550 P-781
"B"
RIGHT PENMOTOR CONNECTOR BRUSH NO. 244550 P-782
NO CONNECTIONS THIS END
SPARE PAIR
SPARE
METRISITE OUTPUT
THERMISTOR
DRIVE COIL
METRISITE INPUT
METRISITE OUTPUT RH
SPECIAL PURPOSE CABLE BRUSH NO. 243983 LENGTH NOT TO BE CHANGED
DRAIN
TO E-4
INPUT TERMINALS TB-181 [TYP]
"C"
LEFT AMP SIGNAL
RIGHT AMP SIGNAL
COMMON
SHOWN FOR REFERENCE ONLY
±IN
NEUT
SHIELD
LIMIT SW. SPARE
SHIELDED CABLE DRAIN [TO A]
FRAME GND
DRIVE AMP CONN. P-721 [TYP] PART NO. 243003
"E"
"D" MALE CONNECTOR TO RELAY CHASSIS
P-190
WIRING SIDE
NO CONN
"F" POWER TERMINALS TB-185 [TYP]
+28V DC
28V NEUT
AC HOT 115 V
AC NEUT
NOTES:
1. CONNECTOR TERMINATION ONLY WITH LIMIT SWITCH ADDED.
2. ALL CONNECTORS VIEWED FROM WIRING SIDE.
3. JUMPERS SHOWN BETWEEN CABLE SHIELDS ARE PRODUCED BY DRAIN WIRES, NOT EXTERNAL CONNECTIONS. EXTERNAL OVERALL SHIELD ON MAIN CABLE ALSO INTERNALLY CONNECTED TO DRAIN WIRES.
BY HOPKINS DATE 10-2-64
NAME DIAGRAM, WIRING 80MM HARNESS ASSEMBLY MODEL 11-2291-00
DWG. NO. 448401
ISSUE CODE G

REV B-1

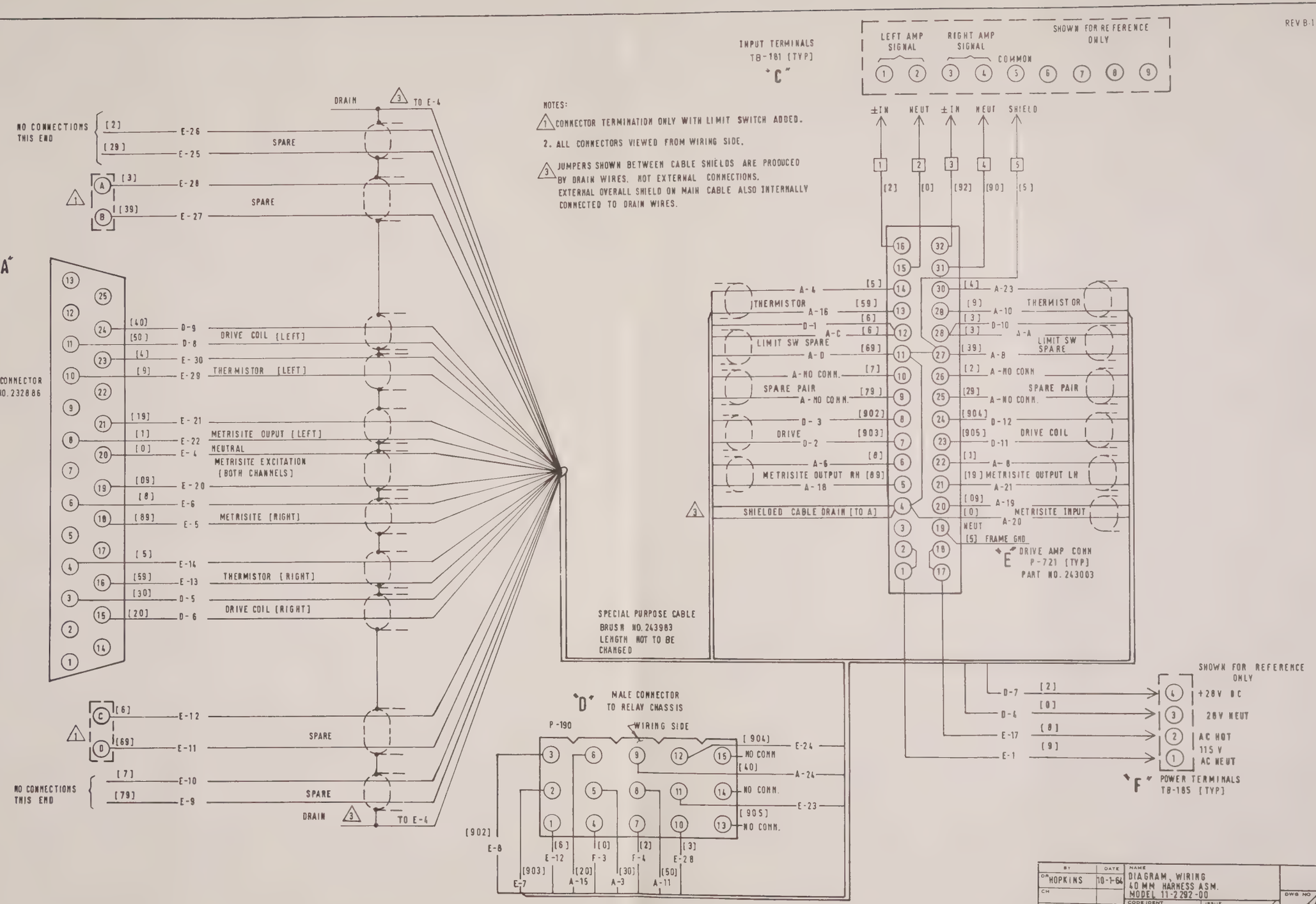

BY	DATE	NAME
DR HOPKINS	10-1-64	DIAGRAM, WIRING 40 MM HARNESS ASM. MODEL 11-2292-00
CH		
APP		CODE IDENT / ISSUE CODE

DWG NO 448402

REV.A-1

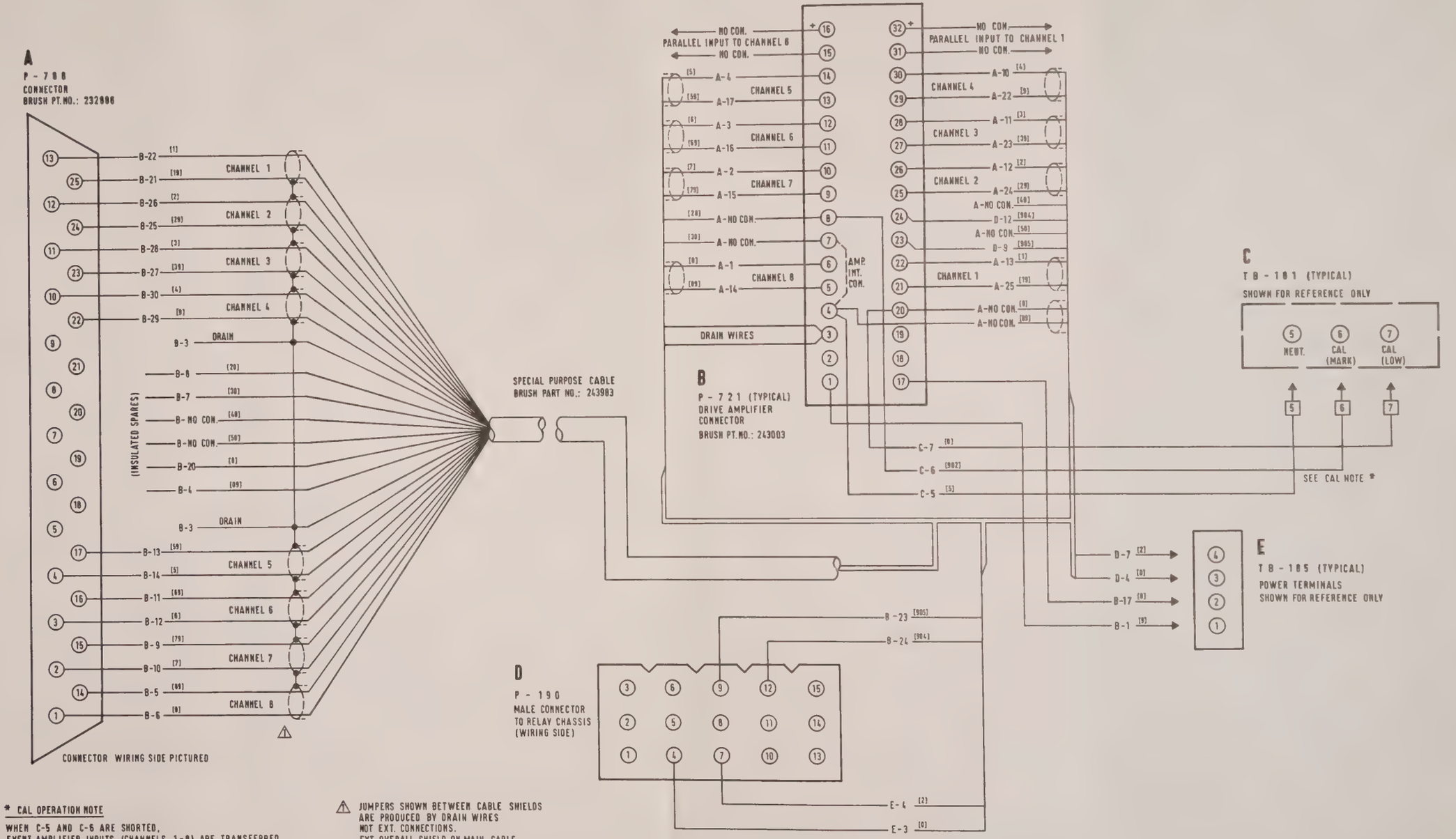

*** CAL OPERATION NOTE**

WHEN C-5 AND C-6 ARE SHORTED,
EVENT AMPLIFIER INPUTS (CHANNELS 1-8) ARE TRANSFERRED
TO CONFIDENCE VOLTAGE "MARK" CONDITION.
IF, IN ADDITION, C-7 IS SHORTED TO C-5 AND C-6,
EVENT AMPLIFIER INPUTS ARE REDUCED TO
BELOW THRESHOLD VOLTAGE LEVEL

⚠ JUMPERS SHOWN BETWEEN CABLE SHIELDS
ARE PRODUCED BY DRAIN WIRES
NOT EXT. CONNECTIONS.
EXT. OVERALL SHIELD ON MAIN CABLE
ALSO INTERNALLY CONNECTED TO DRAIN WIRE

BY	DATE	NAME
DR Lawal	11/5/64	DIAGRAM, WIRING
CH.		MULTIMARKER HARNESS ASM.
APP. F.D. Jeffers	12/1/64	MODEL NO.: 11-2296-00
		CODE IDENT. / ISSUE CODE G

DWG. NO. 448408

12

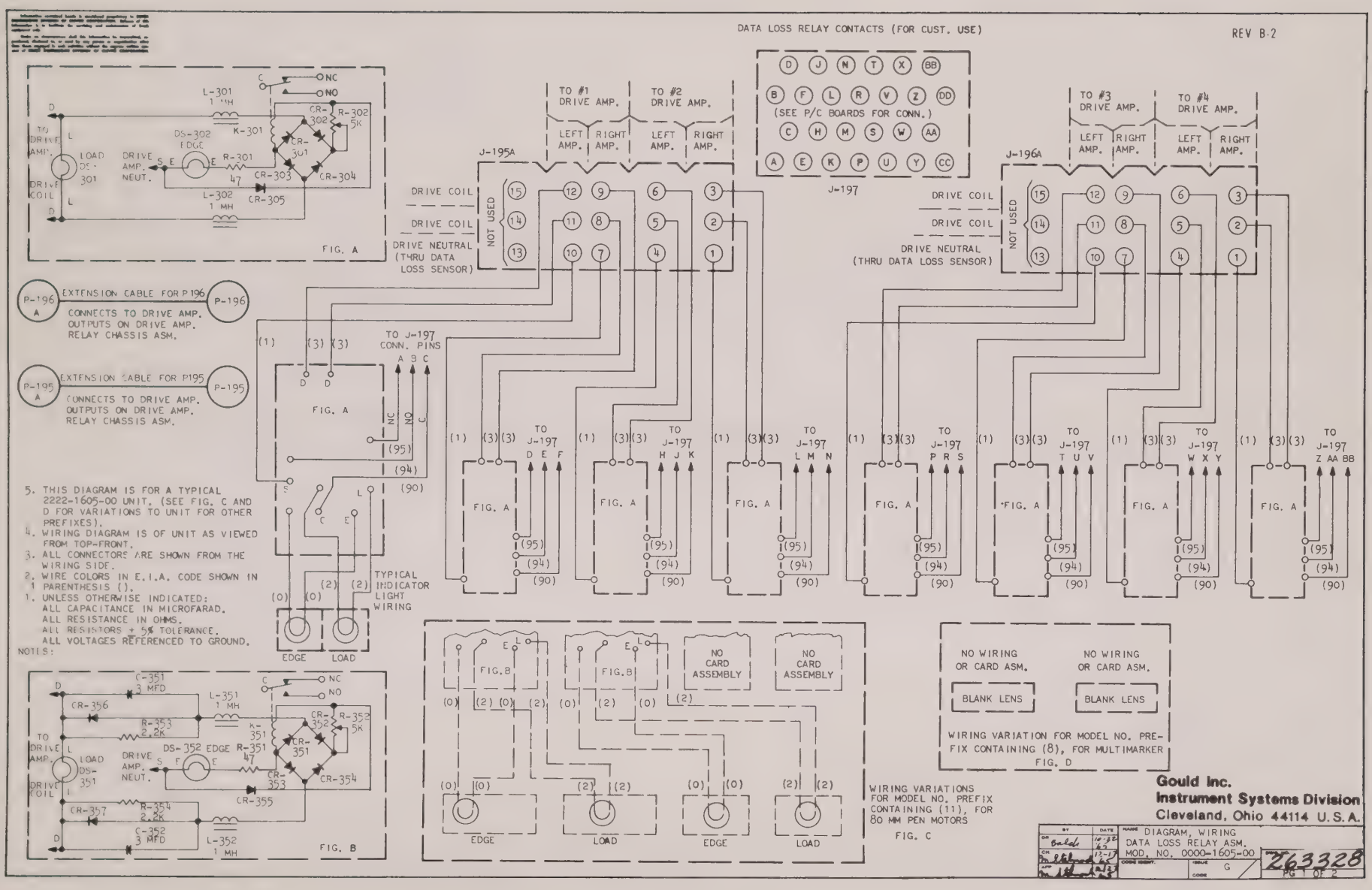

Gould Inc.
Instrument Systems Division
Cleveland, Ohio 44114 U.S.A.

DIAGRAM, WIRING
DATA LOSS RELAY ASM.
MOD. NO. 0000-1605-00

263328

PG 1 OF 2

Information contained herein is considered proprietary to GOULD INC., INSTRUMENT SYSTEMS DIVISION. Release of this information is to facilitate the servicing and maintenance of Gould equipment only.

Under no circumstances shall this information be transmitted, reproduced, disclosed to, or used by any person or organization other than those engaged in such activities without the express written consent of GOULD INC., INSTRUMENT SYSTEMS DIVISION.

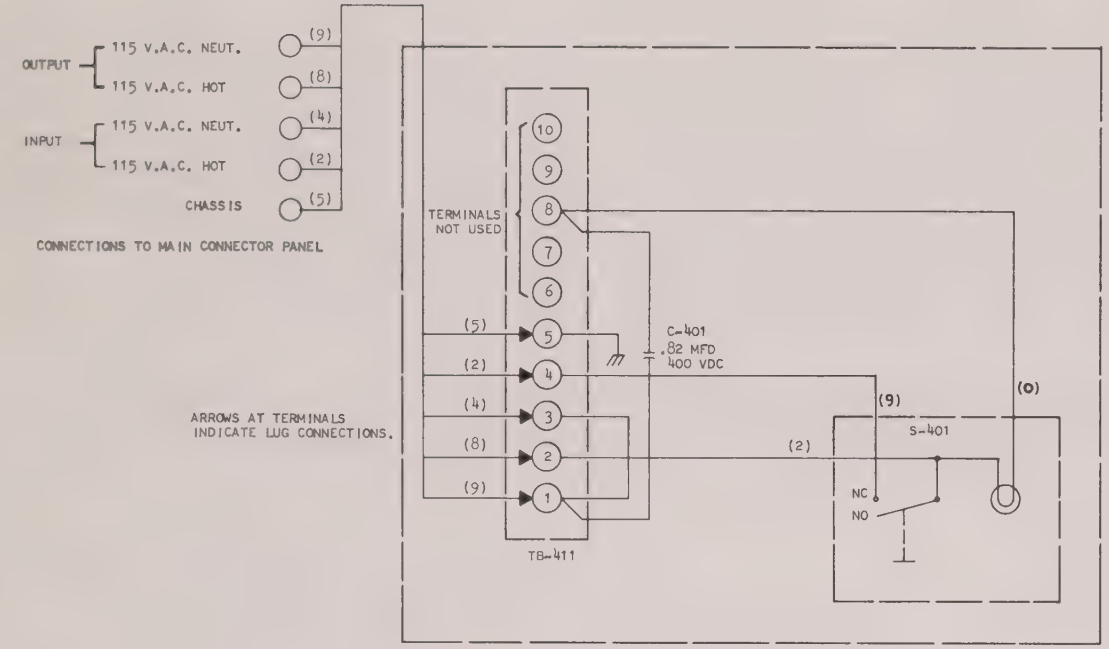

Gould Inc.
Instrument Systems Division
Cleveland, Ohio 44114 U.S.A.

BY	DATE	NAME	SCHEMATIC
WASTL/EH		MODEL NO. 0000-1605-00	
		CODE IDENT. 96795	ISSUE CODE G

Z63328
PG. 2 OF 2

REV. A-1

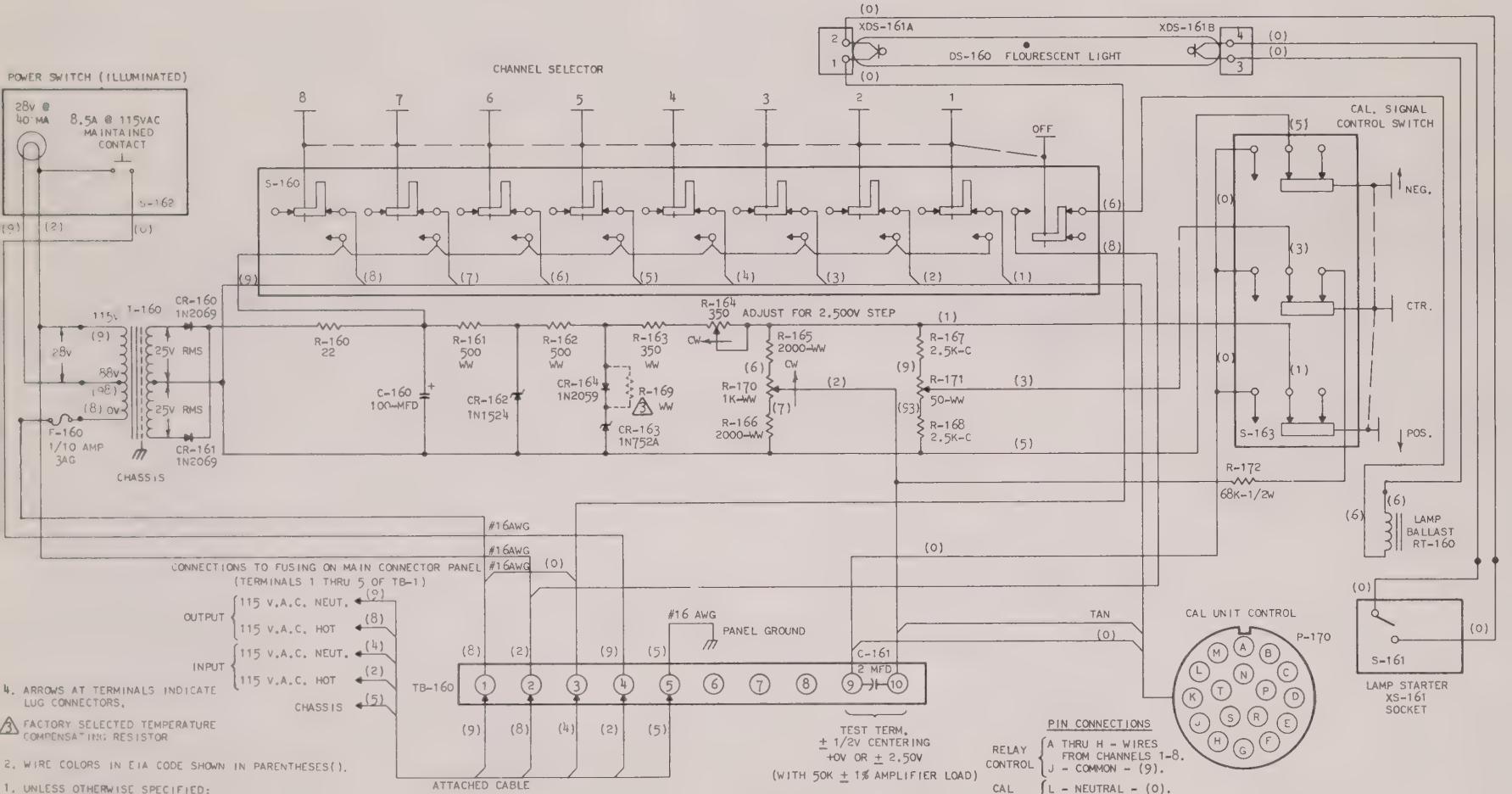

4. ARROWS AT TERMINALS INDICATE LUG CONNECTORS.

⚠ FACTORY SELECTED TEMPERATURE COMPENSATING RESISTOR

2. WIRE COLORS IN EIA CODE SHOWN IN PARENTHESES( ).

1. UNLESS OTHERWISE SPECIFIED:
ALL RESISTANCE IN OHMS.
ALL RESISTORS ARE 5% TOLERANCE
C=.25%

OTES:

Gould Inc.
Instrument Systems Division
Cleveland, Ohio 44114 U.S.A.

BY	DATE
DR Balch	6-18
CH	6/16
APP	7/22/65

NAME: DIAGRAM, WIRING
MOD. NO. 0000-5403-20
CODE IDENT
ISSUE CODE G
DWG NO. 262352
SHEET 1 OF 1

REV.A-1

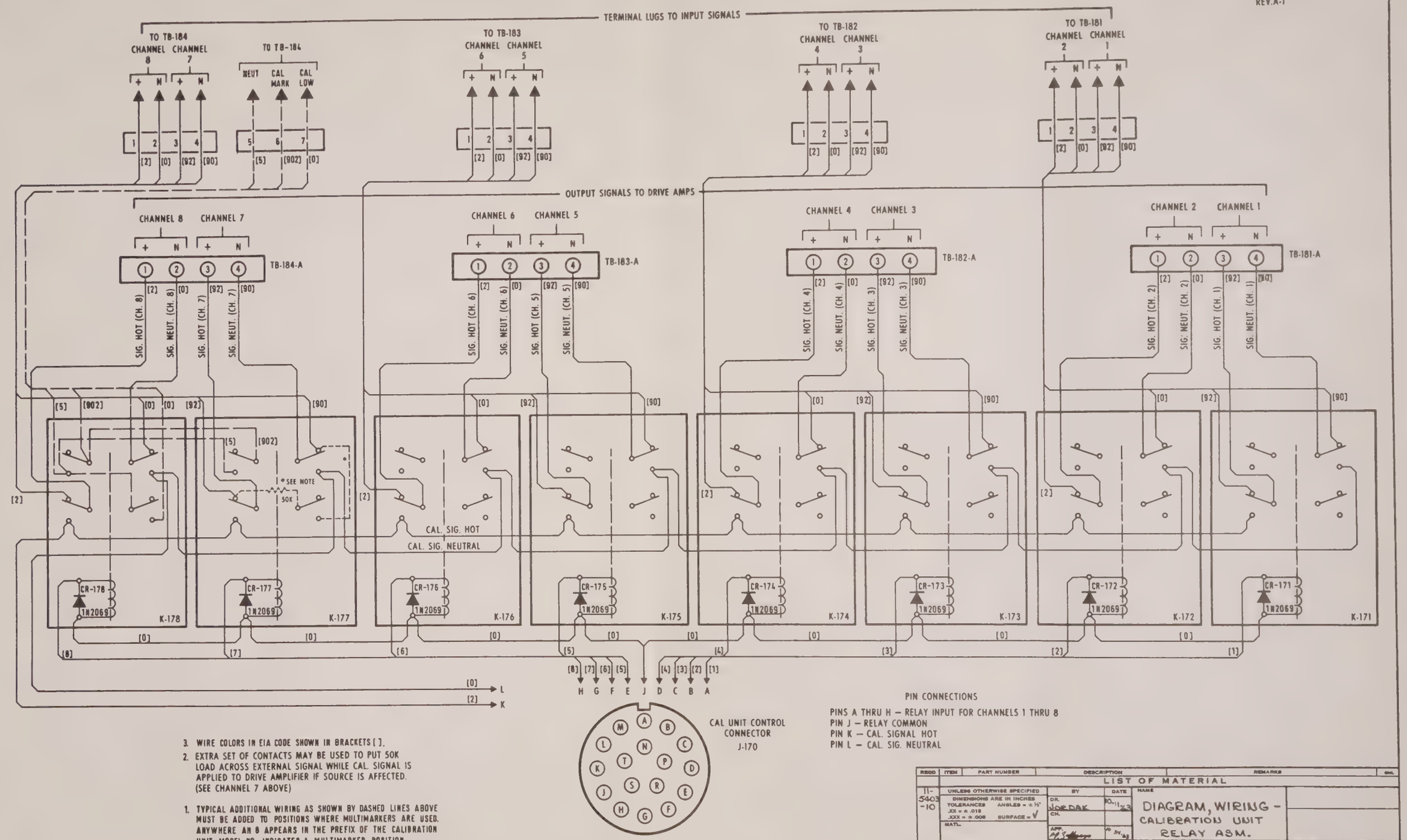

PIN CONNECTIONS

PINS A THRU H – RELAY INPUT FOR CHANNELS 1 THRU 8
PIN J – RELAY COMMON
PIN K – CAL. SIGNAL HOT
PIN L – CAL. SIG. NEUTRAL

NOTES:

1. TYPICAL ADDITIONAL WIRING AS SHOWN BY DASHED LINES ABOVE MUST BE ADDED TO POSITIONS WHERE MULTIMARKERS ARE USED. ANYWHERE AN 8 APPEARS IN THE PREFIX OF THE CALIBRATION UNIT MODEL NO. INDICATES A MULTIMARKER POSITION. SEE M1-40185
2. EXTRA SET OF CONTACTS MAY BE USED TO PUT 50K LOAD ACROSS EXTERNAL SIGNAL WHILE CAL. SIGNAL IS APPLIED TO DRIVE AMPLIFIER IF SOURCE IS AFFECTED. (SEE CHANNEL 7 ABOVE)
3. WIRE COLORS IN EIA CODE SHOWN IN BRACKETS [ ].

LIST OF MATERIAL

REQD	ITEM	PART NUMBER	DESCRIPTION	REMARKS	GRP.
11-5403-10					

UNLESS OTHERWISE SPECIFIED
DIMENSIONS ARE IN INCHES
TOLERANCES ANGLES = ± ½°
.XX = ± .010
.XXX = ± .005
SURFACE = √
MATL.
ADD P/N.
FIRST USE

BY: JOE DAK DATE: 10-11-63
CH.
APP. DATE

NAME: DIAGRAM, WIRING - CALIBRATION UNIT RELAY ASM.

CODE IDENT. ISSUE: G CODE
SCALE —
DWG. NO. 445000

Information contained herein is considered proprietary to GOULD INC., INSTRUMENT SYSTEMS DIVISION Release of this information is to facilitate the servicing and maintenance of Gould equipment only
Under no circumstances shall this information be transmitted, reproduced, disclosed to, or used by any person or organization other than those engaged in such activities without the express written consent of GOULD INC INSTRUMENT SYSTEMS DIVISION

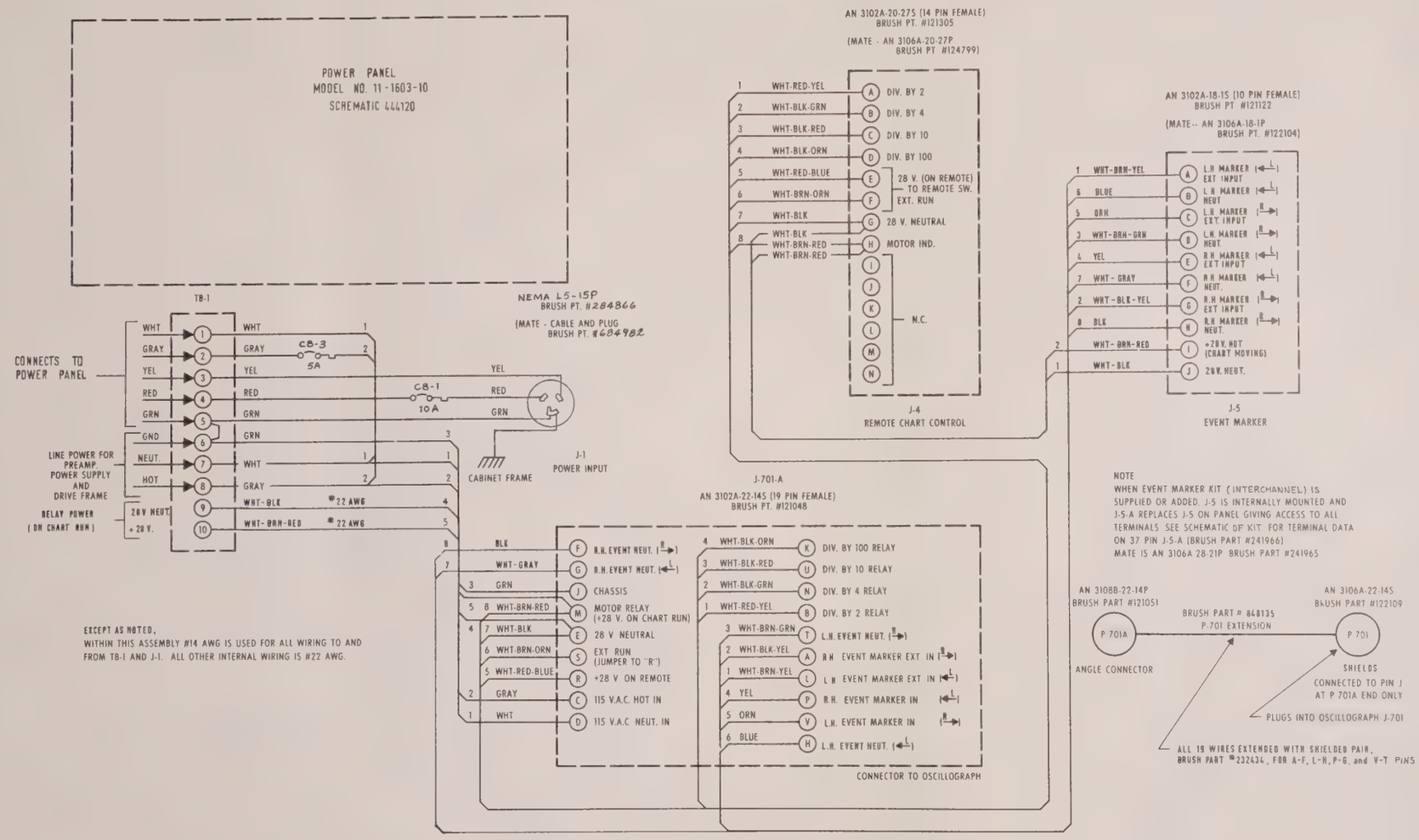

Gould Inc.
Instrument Systems Division
Cleveland, Ohio 44114 U.S.A.

REQD	ITEM	PART NUMBER	DESCRIPTION	REMARKS	CML
			LIST OF MATERIAL		

UNLESS OTHERWISE SPECIFIED	BY	DATE	NAME	
DIMENSIONS ARE IN INCHES AND INCLUDE PLATING XXX = ± .005 SURFACE FINISH XX = ± .015 X = ± .06 ANGLES = ± 0° 30'	DR DT/cl	8-4-64	DIAGRAM, WIRING MAIN CONNECTOR PANEL MODEL NO. 11-1601-11	
	CH.			
	APP [illegible]	8-21-64		
MATL	ADD FIN		FED CODE NO 96795	ISSUE CODE G
FIRST USE			SCALE	DWG NO 448080

Information contained herein is considered proprietary to GOULD INC., INSTRUMENT SYSTEMS DIVISION. Release of this information is to facilitate the servicing and maintenance of Gould equipment only

Under no circumstances shall this information be transmitted, reproduced, disclosed to, or used by any person or organization other than those engaged in such activities without the express written consent of GOULD INC., INSTRUMENT SYSTEMS DIVISION.

REVISIONS			
SYM.	DESCRIPTION	DATE	APPROVAL
A-1	REVISED PER MARKED PRINT DCN 4804	7-21-65	
A-2	REVISED WIRE COLORS FROM DS-1 AND S-1 TO TB-11 DCN 5350	10-24-65	
B-	REVISED TO MEET UL SPEC. DCN 18124	2-17-72	
C-1	ADDED 1, 2, A & B TO MASTER POWER SWITCH DWG 744790	3/9/77	SMOTZER

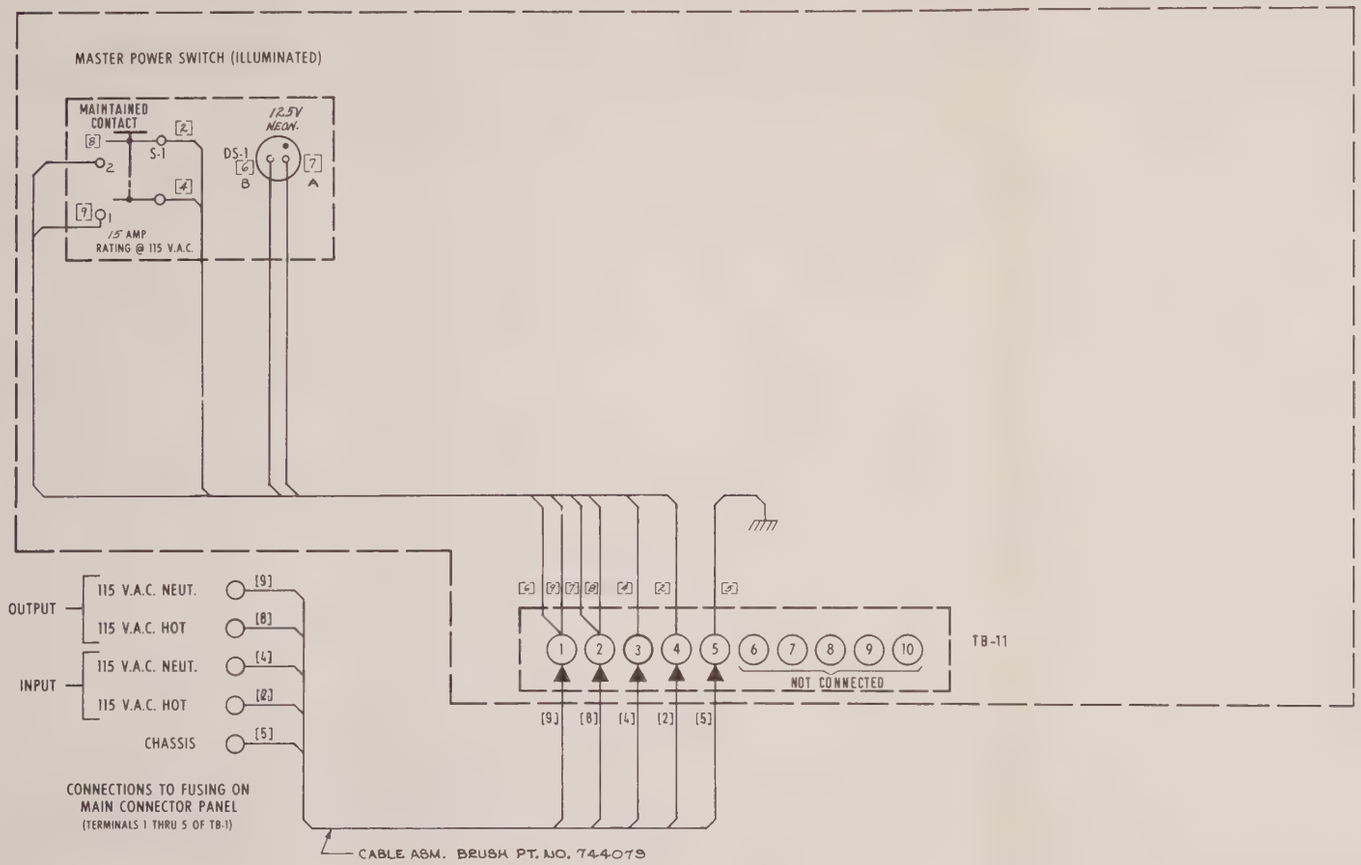

2. WIRE COLORS IN EIA CODE SHOWN IN BRACKETS [ ].
1. ARROWS AT TERMINALS INDICATE LUG CONNECTIONS.

NOTES:

444120

Gould Inc.
Instrument Systems Division
Cleveland, Ohio 44114 U.S.A.

REQD	ITEM	PART NUMBER	DESCRIPTION	REMARKS	CHG
			LIST OF MATERIAL		

11-1603-10	UNLESS OTHERWISE SPECIFIED DIMENSIONS ARE IN INCHES TOLERANCES ANGLES = ± ½° .XX = ± .015 .XXX = ± .005 SURFACE = √ MATL. ADD FIN.	DR. BY JORDAK 3-25-63 CH. BY APPR. FD Jefferano 6/28/63	NAME DIAGRAM, WIRING - SYSTEM POWER PANEL ASM.	NEXT ASSY APPLICATION USED ON	
FIRST USE			CODE IDENT SCALE	ISSUE CODE G WT.	DWG. NO. 444120

Information contained herein is considered proprietary to GOULD INC., INSTRUMENT SYSTEMS DIVISION. Release of this information is to facilitate the servicing and maintenance of Gould equipment only.

Under no circumstances shall this information be transmitted, reproduced, disclosed to, or used by any person or organization other than those engaged in such activities without the express written consent of GOULD INC., INSTRUMENT SYSTEMS DIVISION

REVISIONS		
SYM	DESCRIPTION	DATE
A-1	REPRO OF 448080 REV 00-2	10-11-72 TOTH
B-1	REVISED	10-24-72 TOTH
C-1	J-1 WIRES WERE "B", [6] & [9]	4-2-73 TOTH
D-1	REVISED PER DCN 1053	BLK 6-3-73
E-1	REVISED PER DCN 1147	5-29-75
F-1	ADDED [6] & [9] JUMPER	FOWLER
G-1	TIED SECONDARY OF T-1 TO CHASSIS PER DCN #17238	11-25-75 C.F.
H-1	REVISED S.H. PER ECO 7243	JAN 29 1976
J-1	REVISED NUMBERING, POWER SWITCH	DCN 23791 R.S. 5-9-77

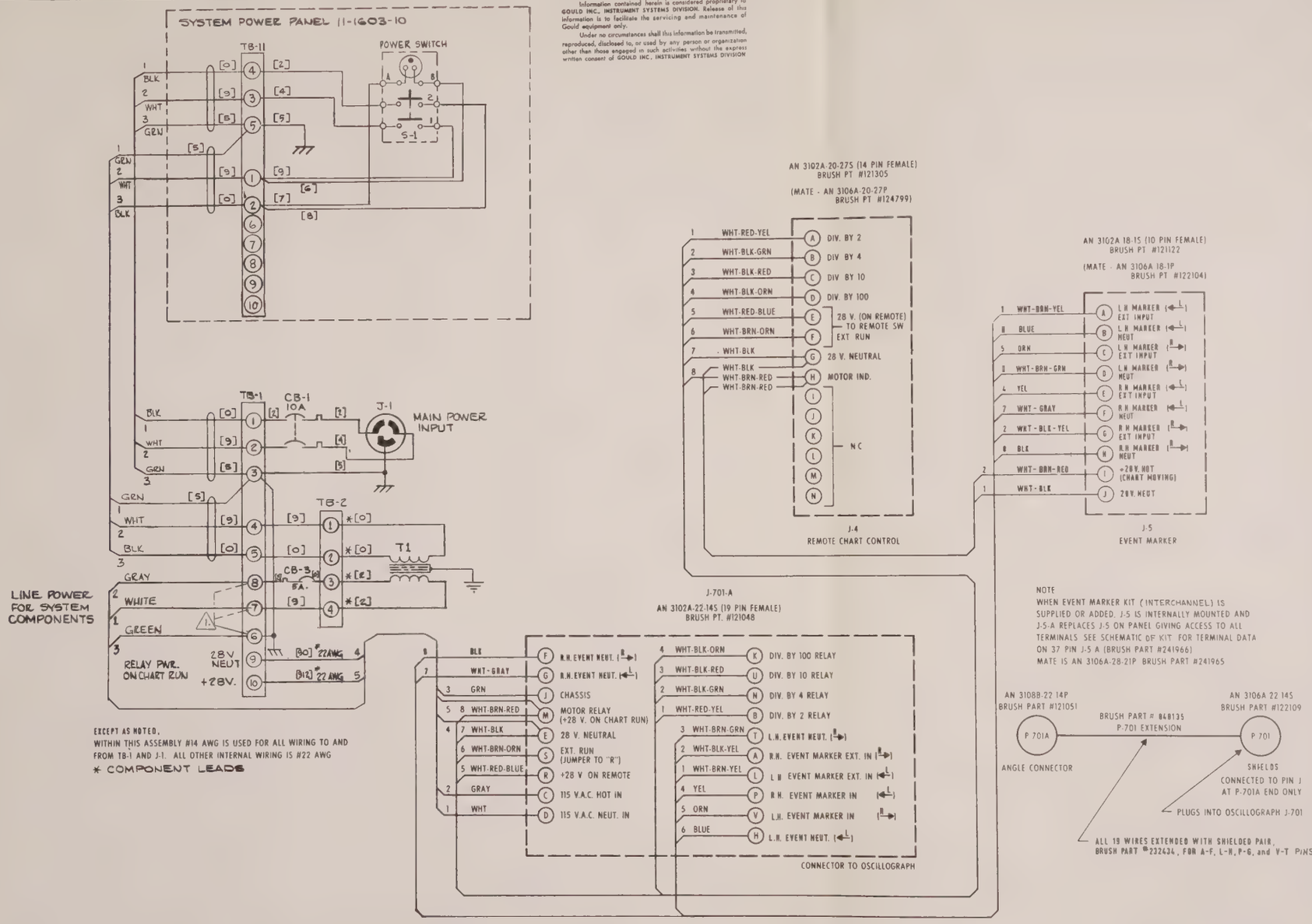

EXCEPT AS NOTED,
WITHIN THIS ASSEMBLY #14 AWG IS USED FOR ALL WIRING TO AND FROM TB-1 AND J-1. ALL OTHER INTERNAL WIRING IS #22 AWG

* COMPONENT LEADS

⚠1 SECONDARY LEADS OF TRANSFORMER T-1 HAVE BEEN SYSTEM PHASE TESTED. LABELED LEAD (EITHER FROM PIN #7 OR PIN #8 OF T8-1) HAS BEEN JUMPERED TO CHASSIS GROUND. COMPONENT LEAD CONFIGURATION TO T8-1 SHOULD NOT BE CHANGED.

NOTES:

Gould Inc.
Instrument Systems Division
Cleveland, Ohio 44114 U.S.A.

REQD	ITEM	PART NUMBER	DESCRIPTION	REMARKS	CML
			LIST OF MATERIAL		

UNLESS OTHERWISE SPECIFIED: DIMENSIONS ARE IN INCHES AND INCLUDE PLATING; XXX = ± .005 SURFACE; XX = ± .015 FINISH; X = ± .06 ANGLES = ± 0° 30'	DR J TOTH 10-72	NAME DIAGRAM, WIRING MAIN CONNECTOR PANEL MODEL NO. 11-1601-11813	
	CH		
	APP KLOSS 10-16-72		
MATL	ADD FIN	FED CODE NO. 96795	ISSUE CODE G
		SCALE	DWG. NO 483944

FIRST USE 5-23-5-817

16

REVISIONS		
SYM.	DESCRIPTION	DATE
A1		

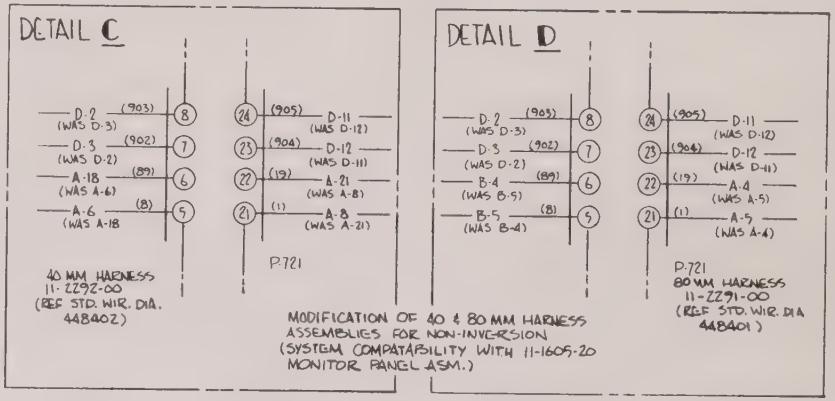

MODIFICATION OF 40 & 80 MM HARNESS ASSEMBLIES FOR NON-INVERSION (SYSTEM COMPATABILITY WITH 11-1605-20 MONITOR PANEL ASM.)

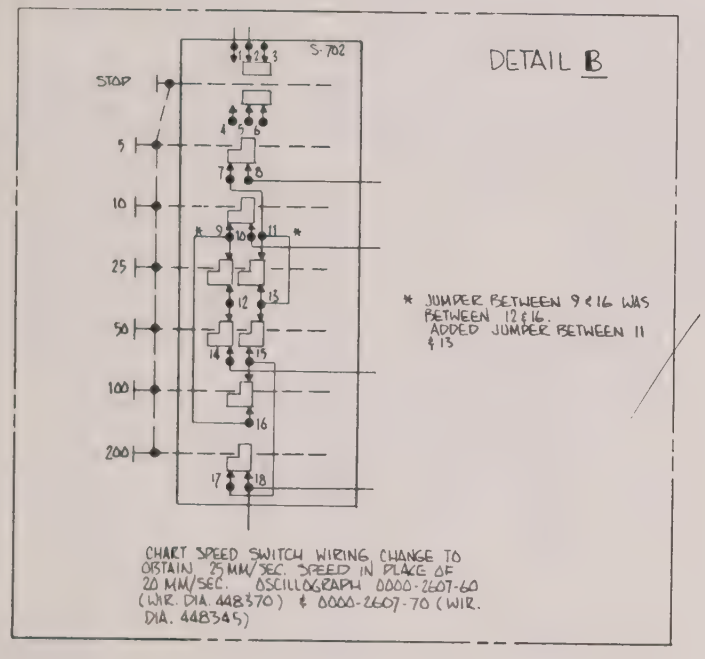

* JUMPER BETWEEN 9 & 16 WAS BETWEEN 12 & 16. ADDED JUMPER BETWEEN 11 & 13

CHART SPEED SWITCH WIRING CHANGE TO OBTAIN 25 MM/SEC. SPEED IN PLACE OF 20 MM/SEC. OSCILLOGRAPH 0000-2607-60 (WIR. DIA. 448370) & 0000-2607-70 (WIR. DIA. 448345)

1. WIRING SHOWN ABOVE IN ALL DETAILS IS CORRECT FOR PERTINANT MODIFICATIONS.

NOTES:

REQD	ITEM	PART NUMBER	DESCRIPTION	REMARKS	CML

LIST OF MATERIAL

UNLESS OTHERWISE SPECIFIED DIMENSIONS ARE IN INCHES AND INCLUDE PLATING .XXX = ± .005 .XX = ± .015 .X = ± .06 SURFACE FINISH ANGLES = ± 0° 30'	BY	DATE	NAME DIAGRAM, WIRING MED STD'S XXXX-1707-4XX & -5XX	Gould Inc. Instrument Systems Division Cleveland, Ohio 44114 U S A
	DR. KLOSS	5-05-72		
	CH.			
	APP. KLOSS	5-05-72		
MATL.	ADD. FIN.		FED. CODE NO. 96795 / ISSUE CODE	DWG NO 383259
			SCALE	

S-813 & S817

FIRST USE

REVISIONS			
SYM.	DESCRIPTION	DATE	APPROVAL
A-1	ADDED CR-761 THRU 774 & NOTE 5. DCN 6915 E.H.	5/29/66	Wattl E.W.E.
A-2	J-5-A WAS: 43 PIN IN ERROR DCN7446 E.H.	7/19/66	[illegible]

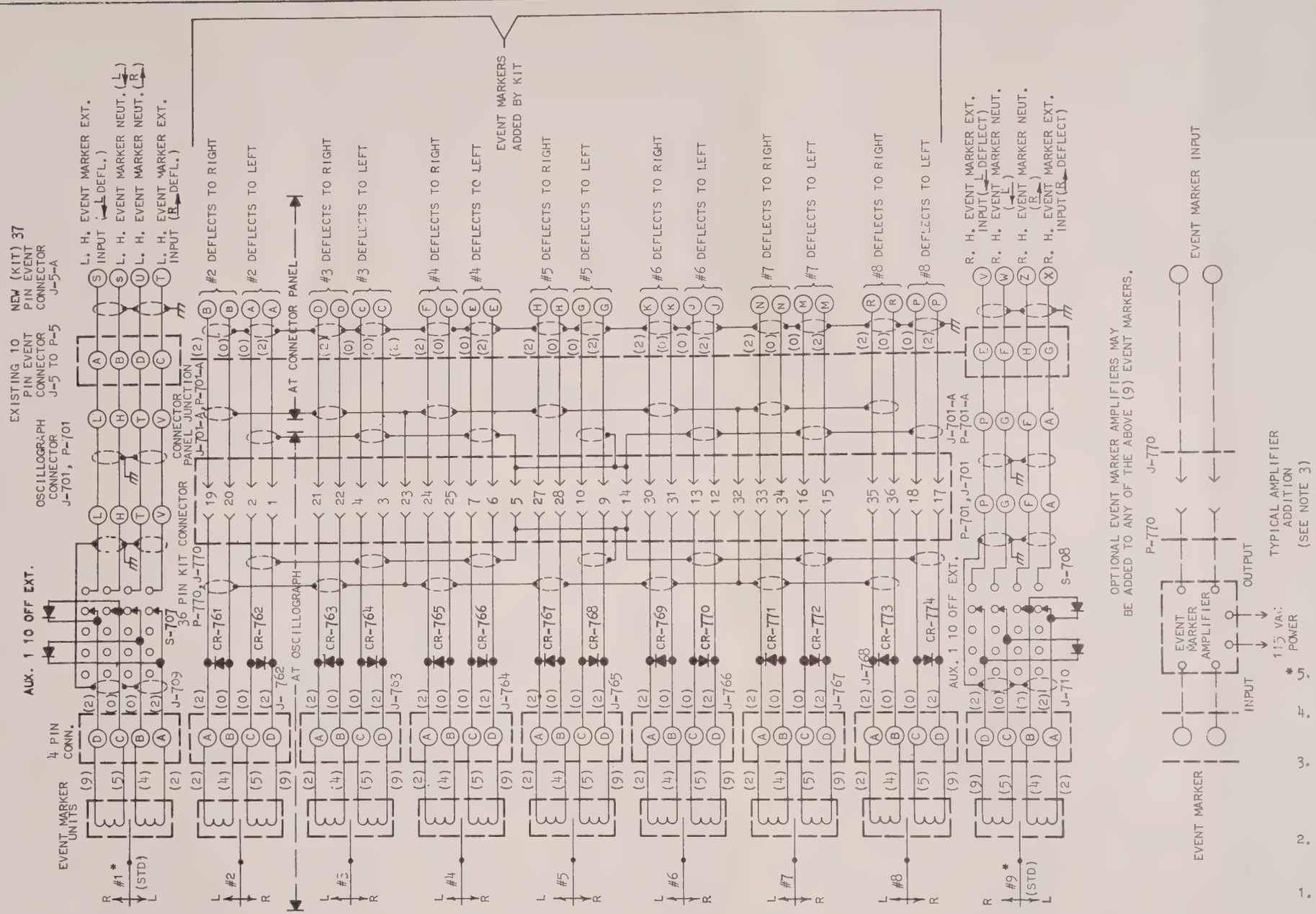

*5. EVENT CHANNELS #1 AND #9 SHOWN FOR REFERENCE ONLY.

4. SMALL TYPED LETTERS (AS OPPOSED TO LARGE LETTERS) SIGNIFY THE LOWER CASE LETTERS SHOWN ON THE CONNECTOR.

3. OBSERVE POLARITY TO MAKE PIN A OR D OF EVENT MARKER GO POSITIVE AND RUN FROM A. C. POWER SWITCHED BY "STOP" BUTTON ON OSCILLOGRAPH.

2. THIS DIAGRAM FOR -00 VERSION. FOR -01 VERSION DISREGARD #5 THRU #8 EVENT MARKERS AND WIRING.

1. WIRE COLORS IN EIA CODE SHOWN IN PARENTHESES ().

NOTES:

Information contained herein is considered proprietary to **GOULD INC., INSTRUMENT SYSTEMS DIVISION.** Release of this information is to facilitate the servicing and maintenance of Gould equipment only.

Under no circumstances shall this information be transmitted, reproduced, disclosed to, or used by any person or organization other than those engaged in such activities without the express written consent of **GOULD INC., INSTRUMENT SYSTEMS DIVISION**

Gould Inc.
Instrument Systems Division
Cleveland, Ohio 44114 U.S.A.

BY	DATE	NAME
DR. [signature]	7-15-65	DIAGRAM, WIRING
CH. [signature]	7/15/65	MODEL NO. 11-2221-00
APP. [signature]	7/1/65	MODEL NO. 11-2221-01
CODE IDENT.		ISSUE CODE G

DWG. NO. 262388

SHEET 1 OF 1

REV. A-2

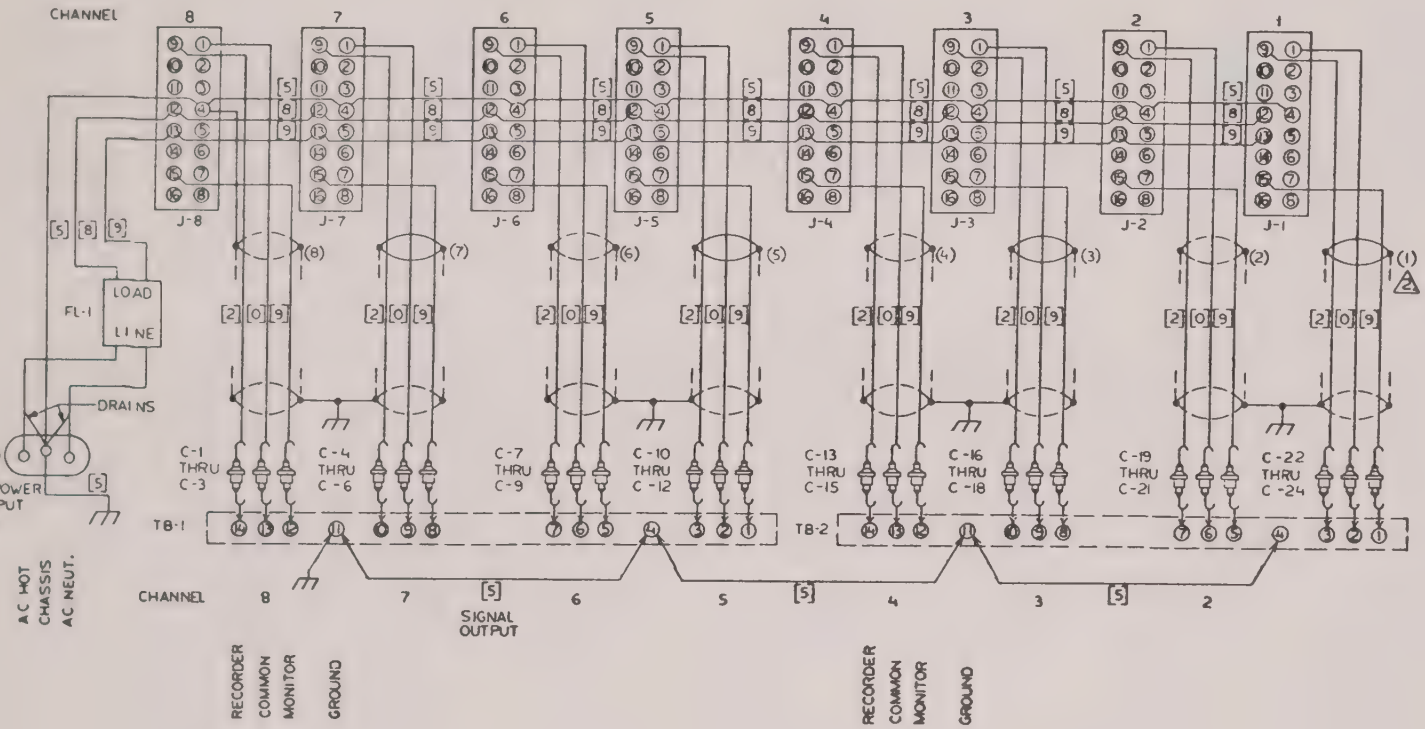

2 ( ) = CABLE MARKER BAND NUMBERS.

1. [ ] = E.I.A. COLOR CODE.

NOTES:

PREAMPLIFIER FRAME ASS'Y.

BY	DATE	NAME	Gould Inc Instrument Systems Division Cleveland, Ohio 44114 U.S.A.
DR VAUGHN	9/30/71	SCHEMATIC MODEL NO. 11-4588-13	
CK V.L.	11/1/71		DWG NO. 282140
WEILAND	11/1/71	CODE IDENT 96795 ISSUE CODE 6	PG. 1 OF 2

REV. A-2

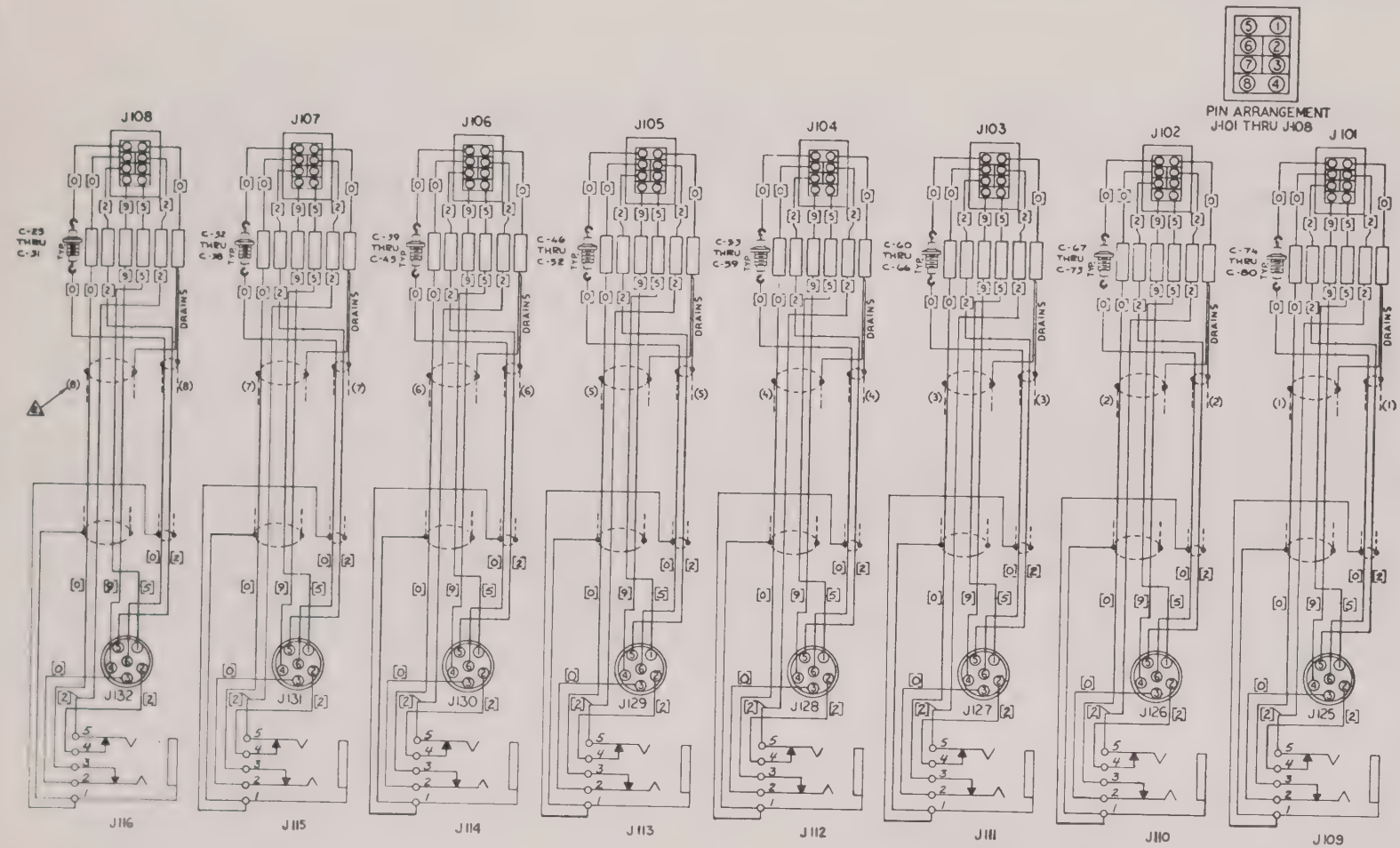

PREAMPLIFIER FRAME ASS'Y.

BY	DATE	NAME	SCHEMATIC	Gould Inc Instrument Systems Division Cleveland, Ohio 44114 U.S.A.
DR HAMMONDS	11/30/71			
CH V.L.	11/1/71		MODEL NO. 11-4588-13	DWG 282140
APP WEILAND	11/1/71	CODE IDENT 96795	ISSUE CODE G	PG. 2 OF 2

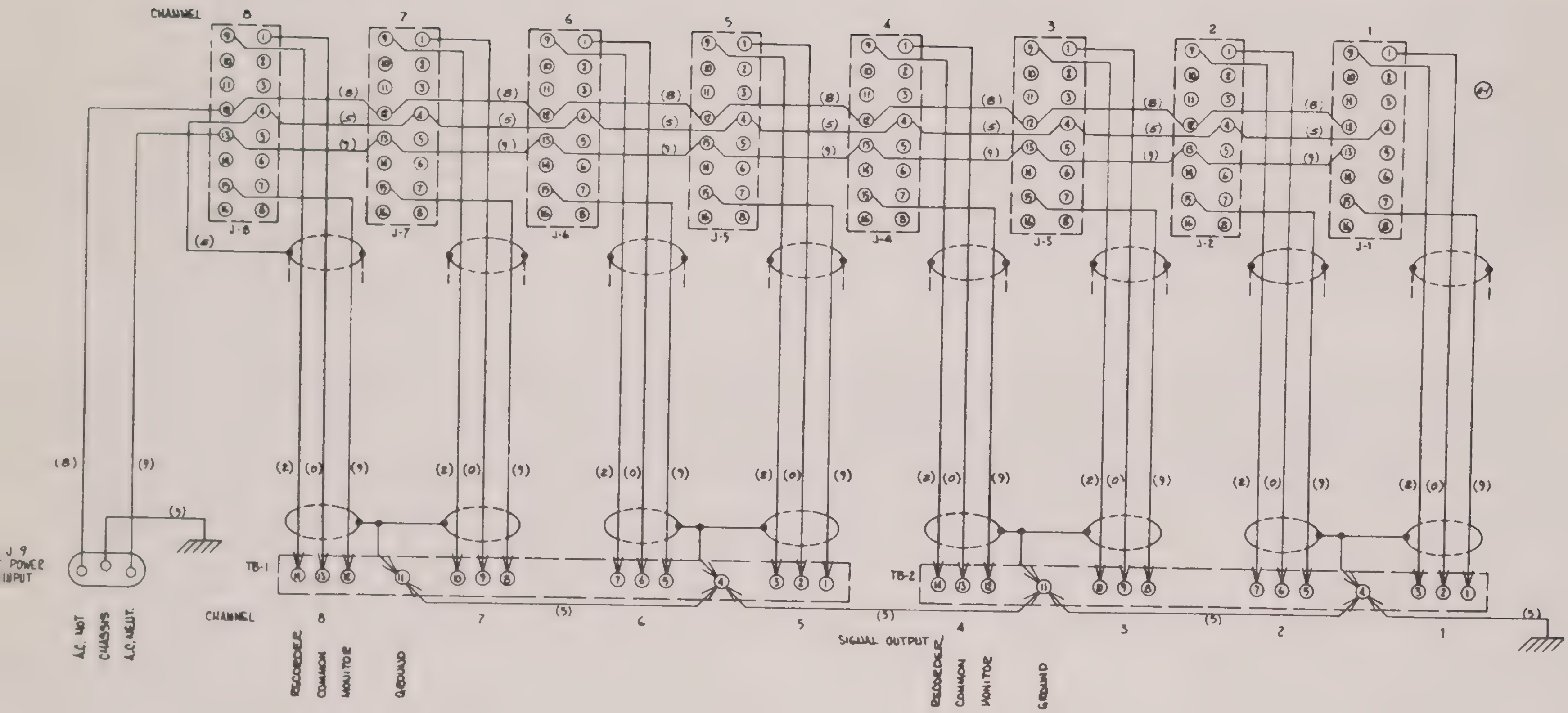

NOTES:
1. NUMBERS IN PARENTHESIS INDICATE EIA COLOR CODE. -( )

REVISIONS			
SYM.	DESCRIPTION	DATE	APPROVAL

LIST OF MATERIAL

UNLESS OTHERWISE SPECIFIED DIMENSIONS ARE IN INCHES AND INCLUDE PLATING	
DR.	KLOSS
NAME	DIAGRAM, WIRING PREAMP. FRAME ASM.
FED. CODE NO.	96795
ISSUE	G
DWG. NO.	469437

Gould Inc.
Instrument Systems Division
Cleveland Ohio 44114 U.S.A.

11-4588-12

GOULD

MANUAL PART NO.
13-804185-05

D.C. PREAMPLIFIER
MODEL 13 4185 05

PRINTED 8-30-76
COPYRIGHT 1969

Gould Inc., Instrument Systems Division
3631 Perkins Avenue-Cleveland, Ohio 44114

3RD PRINTING
PRINTED IN U.S.A.

GOULD MODEL 13-4185-05 PREAMPLIFIER
MANUAL REVISIONS
3RD PRINTING

In keeping with the theme of constant improvement, the Gould Documentation Department has included manual revisions in the effort to maintain current manuals. These revisions should be manually inserted in ink on the appropriate pages.

PAGE	PARAGRAPH OR FIGURE	REVISION
8.6	Add New C202	Add new capacitor C202 part number 287614-103
	Schematic 265865 Sheet (3)	Add capacitor across base and emitter of Q202 as shown below: Revision G
	Schematic 265865 Sheet (1)	Add Callout of terminal 4 to S501 thru S508 shown below: 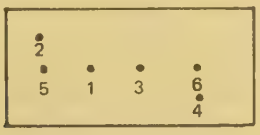 Change S801 (wire Color 9126) From: Wire Harness – A To: Wire Harness – B On S801 change wire (9) to: (4) On S801 change (Wire 4) From: Harness – B To: Harness – A Revision H DCN: 24789

TABLE OF CONTENTS

SECTION	DESCRIPTION	PAGE
I	GENERAL INFORMATION	
	1.1 Introduction	1.1
	1.2 Specifications	1.2
II	INSTALLATION	
	2.1 General	2.1
	2.2 Cabinet Installation	2.1
	2.3 Signal Connections	2.1
	2.4 Outline Dimensions	2.1
III	SERVICING	3.1
IV	OPERATION	
	4.1 General	4.1
	4.2 Front Panel Controls	4.1
	4.3 Internal Control	4.3
V	MAINTENANCE	
	5.1 General	5.1
	5.2 Fluorescent Lamps	5.1
	5.3 Fluorescent Lamp Starters	5.1
	5.4 Lamp Fuse	5.2
VI	CALIBRATION	
	6.1 General	6.1
	6.2 Calibration Procedures	6.1
VII	THEORY OF OPERATION	
	7.1 General	7.1
	7.2 Detailed Description	7.1
VIII	PARTS IDENTIFICATION	8.1

SECTION I
GENERAL INFORMATION

1.1 INTRODUCTION

Gould eight-channel, direct current, Preamplifier, Model 13-4185-05 (Fig. 1-1) is designed for use with Gould multichannel recording systems. The preamplifier provides medium-gain amplification, where inputs are generally of similar character, as in telemetry, system test, or analog computer installations.

Seven attenuator settings (plus OFF) are provided for each channel and are operated by pushbuttons which illuminate when depressed. Pushbuttons are also provided for local and remote operations, including computer start, stop, hold, or reset, plus instantaneous all-channel check for baseline position, calibration and range setting. Toggle switches, one for each channel, provide polarity reversal of the input signal. The full-scale pen positioning and variable gain sensitivity controls are fitted with locking knobs to prevent inadvertent change after desired setting is selected.

Measurement range is 50 millivolts per chart division, to 250 volts full scale for each channel. Inputs are single-ended, grounded, with 50 kilohm input impedance. Circuitry is solid-state with the power supply built in.

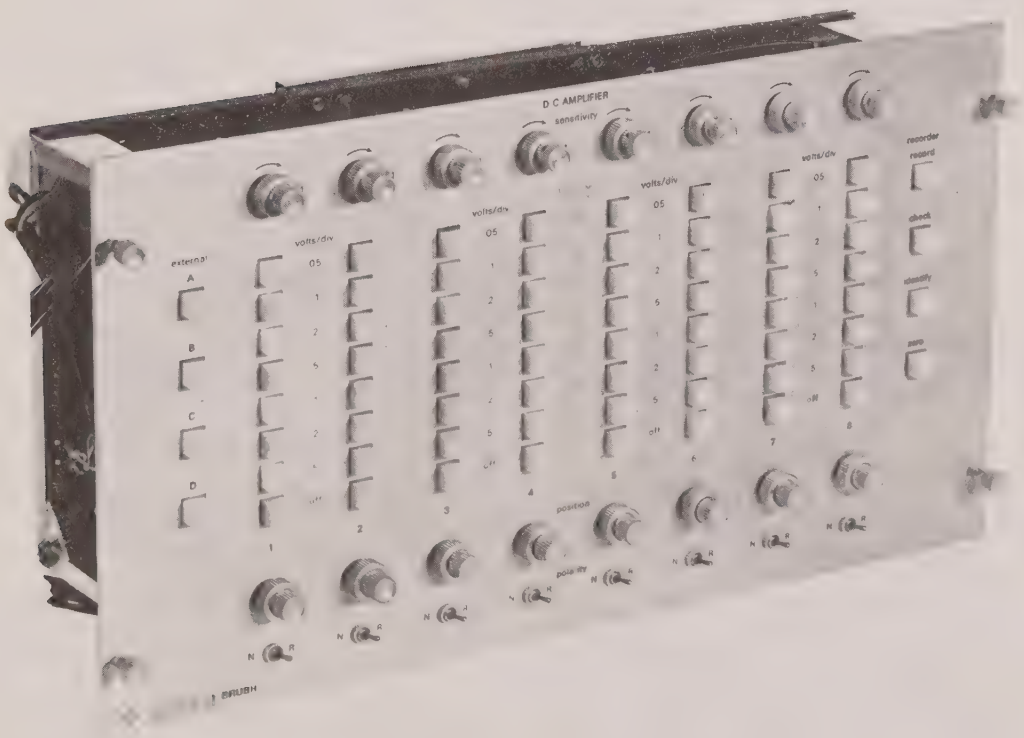

FIGURE 1-1 SOLID STATE PREAMPLIFIER 13-4185-05

1.2 SPECIFICATIONS

The following specifications are pertinent to Preamplifier, Model 13-4185-05.

Signal Input	
Impedance	50K ohm ±1%
Sensitivity (Max)	50 millivolts per division
Pen Position	±75 divisions of dc suppression minimum
Attenuator	
Steps	.05, 0.1, 0.2, 0.5, 1, 2, 5 volts per division and OFF
Maximum Input Voltage	±150 volts between input terminals; ±500 volts between input terminals and chassis
Tolerance	±1/2%
Internal Calibration Source	
Accuracy	±0.2%
Precision	±0.1%
Signal Output	
To Drive Amplifiers	±2.5 volts into 50K ohms.
Noise (on Recorder)	0.2 division peak-to-peak, maximum.
Linearity	±0.05% full scale
Zero Stability with Respect To:	
Time	0.1 division in 8 hours (after 60-second warm-up)
Temperature	0.05% per °C/±10°C from calibration temperature
Line Voltage	0.05 division for ±10% line voltage
Gain Stability with Respect to:	
Time	0.1% per year
Temperature	0.02% per °C/±10°C from calibration temperature
Line Voltage	0.02% for ±10% line voltage
Frequency Response	No effect on drive amplifier response
Gain	2.00±1%
Power Input	115±10% volts ac; 50 to 400 Hz
Power Supply	Self-contained

SECTION II
INSTALLATION

2.1 GENERAL

This section provides cabinet installation, signal connections and outline dimensions of the preamplifier.

2.2 CABINET INSTALLATION

Refer to drawing 665864.

2.3 SIGNAL CONNECTIONS

a. A.C. Power

Connect preamplifier three leads to main connector panel terminal board TB-1 as follows:

Green lead to terminal 6

White lead to terminal 7

Black lead to terminal 8

b. Signal Input (Connector J-3 on Main Connector Panel)

NOTE: Connector P-3 (122109) mates with connector J-3 (121047).

Connect input signal as follows:

Channel	Signal Lead To Pin	Common Lead To Pin
1	A	N
2	B	P
3	C	R
4	J	S
5	K	T
6	L	U
7	D	E
8	G	H
Shield		M & F

c. Signal Output

Connect preamplifier output lead wire clusters to terminals 1 thru 4 of terminal boards TB-181, TB-182, TB-183, and TB-184 on rear of drive amplifier frame.

d. External Function (Connector J-2 on Main Connector Panel)

NOTE: Connector P-2 (122105) mates with connector J-2 (121121).

Switch Pushbutton	Pin Connection	Lead
A	C	Black (0)
	G	Red (2)
B	C	Black (0)
	I	Red (2)
C	C	Black (0)
	B	Red (2)
D	C	Black (0)
	F	Red (2)
	J (Common)	Yellow (4)
100 vac (REF)	A (Common)	Black (0)
	H (Hi)	Red (2)

2.4 OUTLINE DIMENSIONS

Refer to drawing 265866.

Information contained herein is considered proprietary to **GOULD INC., INSTRUMENT SYSTEMS DIVISION**. Release of this information is to facilitate the servicing and maintenance of Gould equipment only.

Under no circumstances shall this information be transmitted, reproduced, disclosed to, or used by any person or organization other than those engaged in such activities without the express written consent of **GOULD INC., INSTRUMENT SYSTEMS DIVISION**

REVISIONS			
SYM.	DESCRIPTION	DATE	APPROVAL

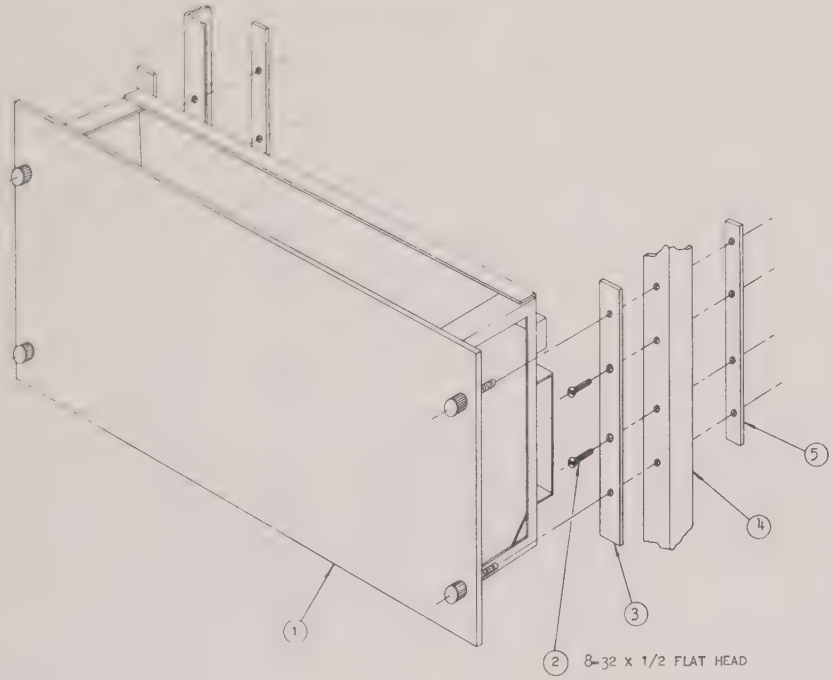

NOTES: 1. NUMBERS IN CIRCLES INDICATE ITEM NUMBERS.
2. ASSEMBLE 3 & 5 TO 4 USING 2.
3. ASSEMBLE 1 TO 4 USING CAPTIVE THUMB SCREWS LOCATED ON FRONT PANEL OF 1.

NO.	BRUSH PART NO.	DESCRIPTION	QUAN
30			
29			
28			
27			
26			
25			
24			
23			
22			
21			
20			
19	422642	ENVELOPE, MANUAL	1
18	13-804185-05	MANUAL, OPERATING	1
17	222640	CARD, CONCEALED DAMAGE	1
16	417508	CARTON, PACKING	1
15	265456	BAG, PLASTIC	1
14			
13			
12			
11	118259-8	BUSHING, CABLE	1
10	118259-10	BUSHING, CABLE	1
9	119993-110	CLAMP, CABLE	1
8	122105	CONNECTOR, PLUG	1
7	119993-112	CLAMP, CABLE	1
6	122109	CONNECTOR, PLUG	1
5	248888	BAR, NUT	2
4	CABINET	19" RETMA	-
3	248887	BAR, SPACER	2
2	31-119916-8208	SCREW, FLAT HD.	4
1	13-4185-05	PREAMPLIFIER ASM.	1

SHIPPING LIST

Gould Inc.
Instrument Systems Division
Cleveland, Ohio 44114 U.S.A.

BY	DATE	NAME	
DR. MILLER	EH	SHIPPING LIST & INSTALLATION INSTRUCTIONS	DWG. NO. 665864
CHK.		CODE IDENT. 96795	ISSUE CODE G

REVISIONS			
SYM.	DESCRIPTION	DATE	APPROVAL

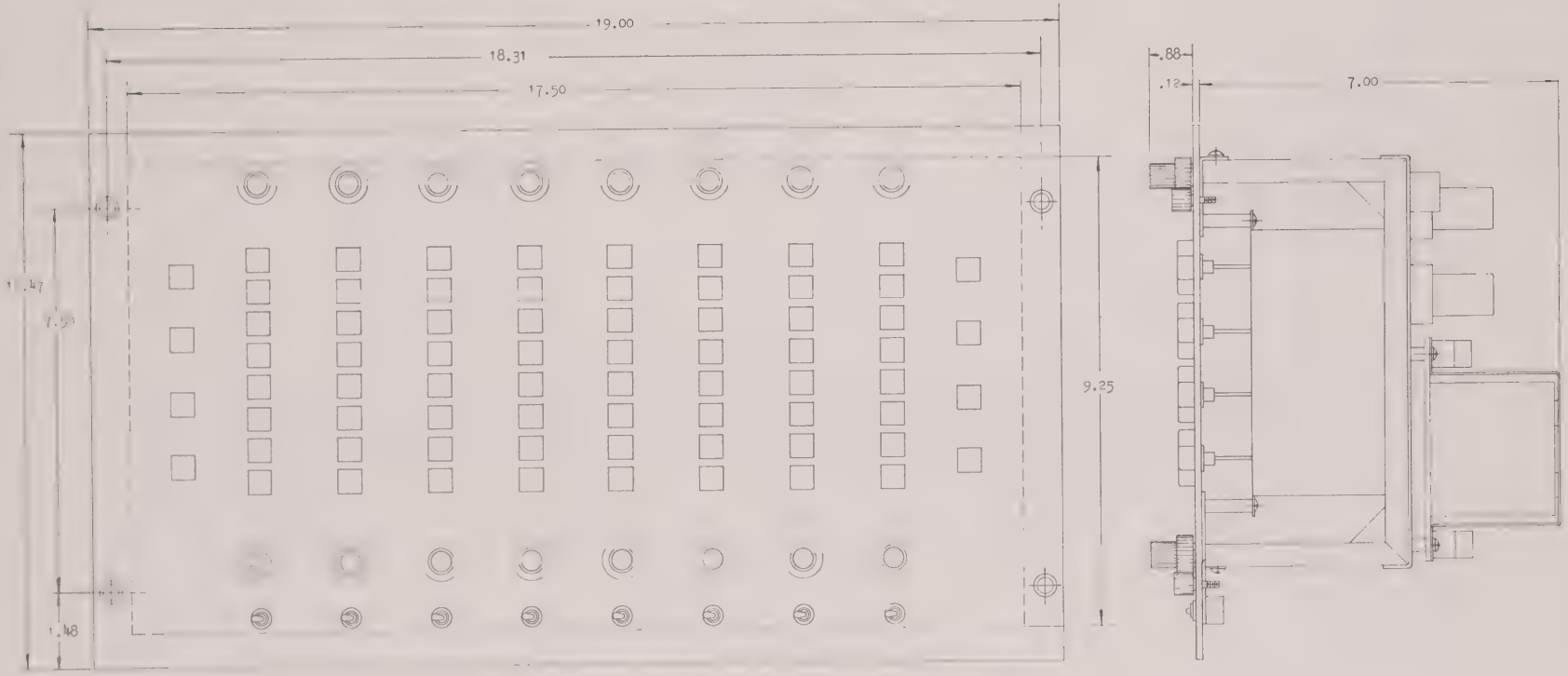

13-4185-05
APPLICABLE FOR ABOVE MODELS

Gould Inc.
Instrument Systems Division
Cleveland, Ohio 44114 U.S.A.

BY	DATE
DR. MILLER	EH
CH.	
APP'D	

NAME: OUTLINE, DIMENSIONAL

CODE IDENT 96795 | ISSUE CODE G

DWG. NO. 265866

SECTION III
SERVICING

3.1 GENERAL

Prior to the initial operation of the dc preamplifiers and at normal preventive-maintenance intervals, perform the following routine service procedures:

1. Check for proper operation of all controls.
2. Check that circuit boards are mounted properly.
3. Check to be sure all cable connectors are secure.
4. Be sure unit is free from dust or dirt.
5. Check for proper operation of lights and starters.

SECTION IV
OPERATION

4.1 GENERAL

This section describes and illustrates the controls necessary for operating the Solid State Preamplifier 13-4185-05.

4.2 FRONT PANEL CONTROLS

NOTE: The circled numbers in Figure 4-1 correspond with the items listed below.

Item No	Control	Description
1	EXTERNAL Function Group	The external function switches are convenience controls used when recorder is operated with a computer or remote system. Four pushbuttons (A), (B), (C) and (D) provide contact closures which enable the operator to control computer reset (initial conditions) hold, or run modes of operation from the recorder. They are momentary switches and though intended for analog computer use, they may be used for any remote control operations where such switch closures are needed.
2	VOLTS/DIV Attenuation Group	The attenuator buttons are located in the center of the panel with eight attenuator positions for each channel expressed in volts per chart division. When the off button is pressed, the amplifier input is grounded. Signal input resistance is always 50K at full clockwise (detent) position of the variable sensitivity controls (up to 200K if sensitivity potentiometer is at minimum sensitivity).
3	Variable SENSITIVITY X1 Controls	The variable sensitivity controls located across top of the panel must be in full clockwise (detent) position to obtain accurate attenuation from the fixed pushbuttons values. There is a control for each channel. By rotating a variable sensitivity adjustment control knob counterclockwise, intermediate sensitivities between the fixed pushbutton values may be obtained. Each control is fitted with a locking knob so that when turned in a clockwise direction, inadvertent turning of the variable sensitivity control is difficult.
4	RECORDER Group	A group of four pushbuttons which operate as follows: RECORD – Pressed for normal operation of the system. Input signals are connected to their respective channels through the attenuator circuits. **NOTE: When a preamplifier function other than RECORD is used, the preamplifier input impedance will change. The resultant impedance will depend upon the individual attenuator setting and will range from 50K ohm in the OFF position to an open circuit in the .05 VOLTS/DIV position.**

Item No	Control	Description
4	RECORDER Group (continued)	CHECK – Used to check or calibrate both the drive amplifier and preamplifier system. Removes external signals and substitues standard 1.25 volt calibration signal for 25 division deflection.

NOTE: CAL switch on rear of preamplifier must be in INT position. Unless external calibration signal is supplied (see Para. 4.3).

IDENTIFY – A convenience control which allows simultaneous recording of all attenuator settings, polarity switch positions, and other data pertinent to the measurements being recorded. As long as it is pressed, this momentary contact switch causes all active analog pens to deflect. The change in position between the pressed and released button position provides a permanent record on the chart of each attenuator setting and the pen polarity.

ZERO – Pens of all channels return to their zero signal voltage positions as controlled by pen position knobs when this button is pressed.

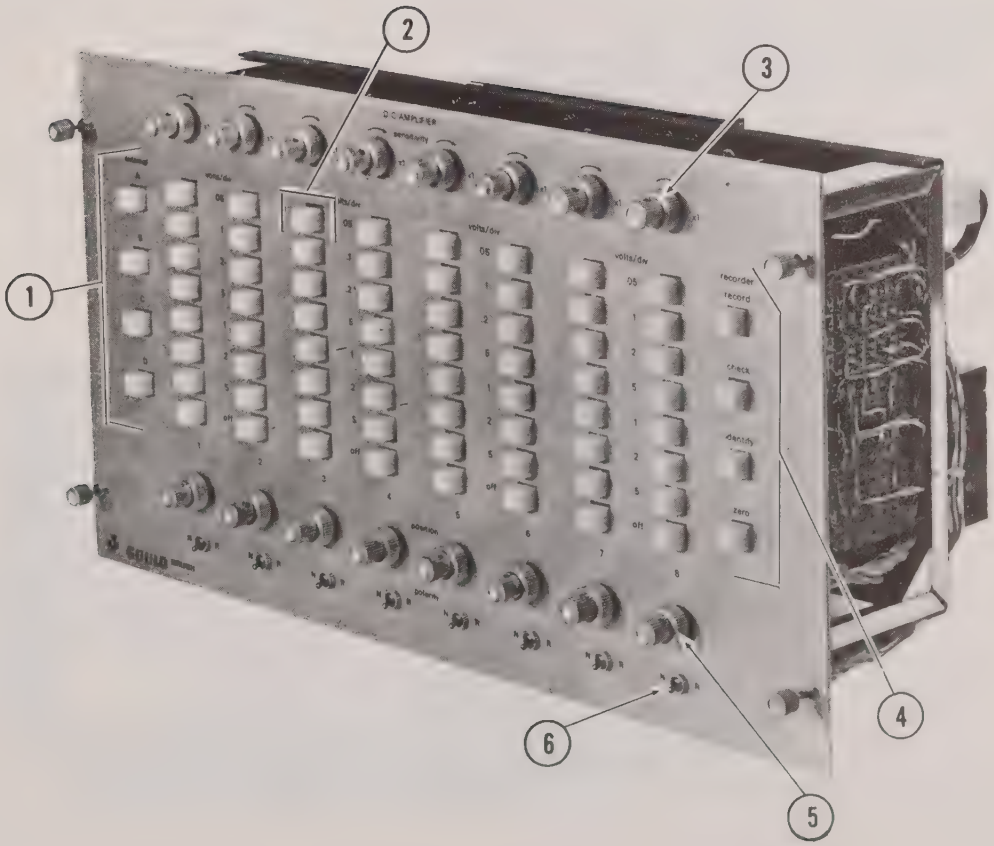

FIGURE 4-1. CONTROL DESCRIPTION

Item No	Control	Description
5	Pen POSITION	Eight pen position controls, one for each channel, are located on the bottom of the Attenuator and Control Panel. These controls permit each pen to be positioned anywhere within the channel and allows either edge of the channel, or any point between, to be used as a base line (zero signal position). Each control is fitted with a locking knob so that once a pen is positioned, inadvertent turning becomes difficult.
6	POLARITY Reversal	Eight switches, one for each channel. Permits polarity of output signal to be changed. Signal position within channel will be displayed on opposite side of base zero line.

4.3 INTERNAL CONTROL

NOTE: Circled number in Figure 4-2 corresponds to item number listed below:

Item No	Control	Description
1	Calibration Switch	INT - Applies a standard 1.25 volt internal calibration signal for 25 division deflection to the pen drive amplifier when the CHECK button of the preamplifier RECORDER group is depressed. EXT - With a +100 ±0.1% -volt reference signal applied to pins A and H of connector J-2, a 1.25 volt calibration signal for a 25-division deflection is applied to the pen drive amplifier when CHECK button of preamplifier RECORDER group is depressed.

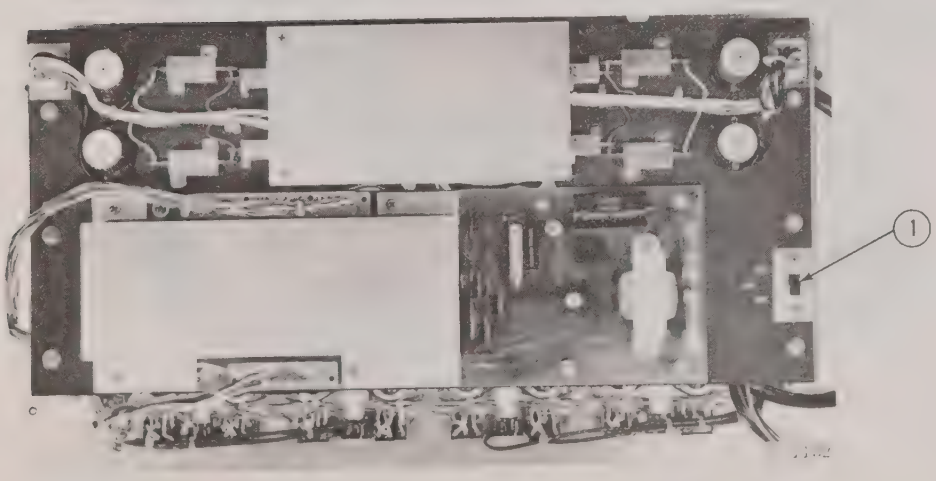

FIGURE 4-2 CONTROL DESCRIPTION - INTERNAL

SECTION V
MAINTENANCE

5.1 GENERAL

The construction of the solid state preamplifier features maximum operating efficiency and dependability with a minimum of maintenance requirements.

This section contains instructions for replacement of fluorescent lamps and starters.

5.2 FLUORESCENT LAMPS

NOTE: Refer to Figure 5-1.

a. Removal

1. Turn off power to unit and disconnect power cable.
2. Loosen four captive thumb screws and tilt top of preamplifier out while bottom of preamplifier is supported on top of SYSTEM POWER panel.
3. Rotate fluorescent lamp until prongs on lamp are aligned with slots in lamp upper socket.
4. Slide end of lamp out of upper socket and gently lift lamp out of unit.

b. Installation

1. Carefully slide fluorescent lamp into unit.
2. Align prongs on lamp with slot in upper socket and insert lamp in lower socket.
3. Press lamp into upper socket and rotate to lock into place.
4. Install preamplifier in cabinet and secure with four captive thumb screws.

5.3 FLUORESCENT LAMP STARTER

a. Removal

1. Turn off power to unit and disconnect power cable.
2. Loosen four captive thumb screws and tilt top of preamplifier out while bottom of preamplifier is supported on top of SYSTEM POWER panel.

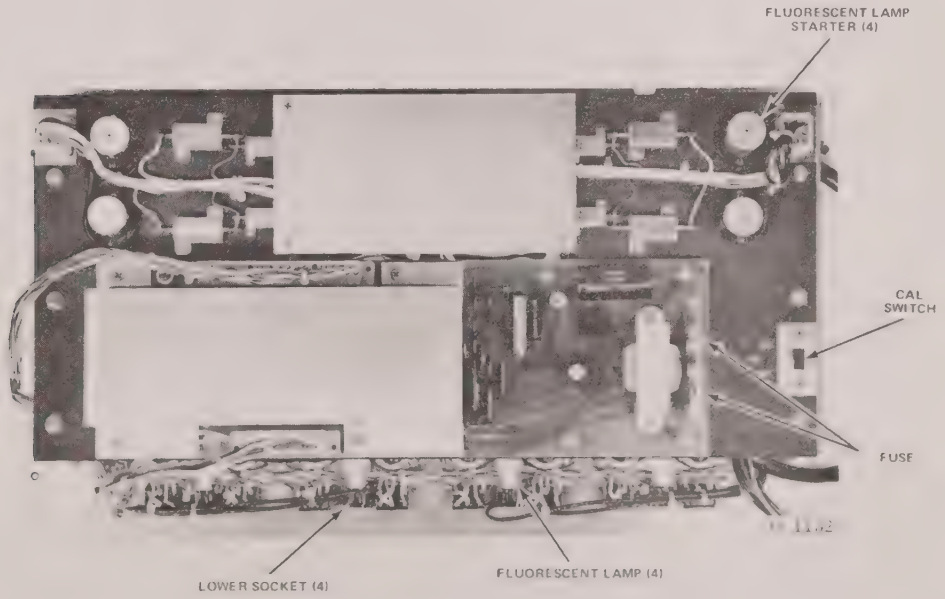

FIGURE 5-1 FLUORESCENT LAMP AND STARTER REPLACEMENT

3. Rotate starter counterclockwise and pull starter from socket.

b. Installation

1. Insert starter prongs into socket and rotate clockwise to lock in place.

NOTE: If fluorescent lamps do not light after starter replacement remove starter, rotate 180 degrees, and insert into socket.

2. Install preamplifier in cabinet and secure with four captive thumb screws.

5.4 LAMP FUSE

Lamp circuit is separately fused. If all lamps fail to light, lamp fuse should be checked.

1. Turn power off and disconnect power cable.
2. Remove preamplifier from cabinet (refer to Para. 2.2).
3. Remove cover to expose lighting circuitry.
4. Check (See Fig. 5-1) fuse and replace if defective.

SECTION VI
CALIBRATION

6.1 GENERAL

This section describes and illustrates the procedures for calibrating the preamplifier.

NOTE: A Differential Voltmeter, John Fluke, Model 803B or equivalent and a Signal Generator, Hewlett-Packard, Model 202A or equivalent are required for calibration.

6.2 CALIBRATION PROCEDURES

a. General

No attempt should be made to calibrate unless the performance check, step b, verifies that the preamplifier is definitely out of calibration. If the stated requirements are not obtained, refer to steps c and d for detailed calibration procedures.

NOTE: Procedures are provided for calibrating a single channel, repeat the procedures for each channel to be calibrated.

b. Performance Check

1. Turn on system power and allow 15 minutes for warm-up.
2. Turn all variable SENSITIVITY X1 controls to full clockwise (detent) position.
3. Place oscillograph into operation according to oscillograph manual.
4. Press CHECK button of RECORDER group. All pens should deflect exactly 25 chart divisions to the right.

NOTE: If pens do not deflect exactly 25 chart divisions, refer to steps c and d for detailed calibration procedures.

5. Press RECORD button of RECORDER group.
6. The following input dc signals should give 25 divisions deflection ±0.25 division at the attenuator settings indicated for each channel.

NOTE: Refer to Paragraph 2.2b for connecting input signal.

dc SIGNAL (Volts)	ATTENUATOR SETTINGS (Volts/Division)
+ 100.00	.05
+ 50.00	.1
+ 25.00	.2
+ 10.00	.5
+ 5.00	1.0
+ 2.50	2.0
+ 1.00	5.0
0.00	OFF

NOTE: All voltages are measured with respect to common.

c. Balance Adjustment

WARNING: CHECK TO BE SURE SYSTEM POWER SWITCH IS OFF AND DISCONNECT POWER CABLE.

1. Loosen four captive thumb screws on front of oscillograph and slide oscillograph out as far as possible.
2. Place a board (wood or composition) across top of oscillograph to act as a table for the preamplifier.
3. Remove preamplifier from cabinet (refer to Para. 2.2) and place preamplifier on oscillograph.
4. Remove printed circuit board cover assembly.

NOTE: Check to be sure all amplifier boards are properly installed.

5. Turn on system power.
6. Use a signal generator and connect a 60-cycle per second signal with a 5-volt peak-to-peak amplitude to each channel at input connector J-3.
7. Press OFF button of attenuation group.
8. Operate oscillograph at a chart speed of 20 millimeters per second.
9. Zero pens at chart center with the pen POSITION control.

10. Press the .05 VOLTS/DIV button.

11. Adjust resistor R-103 on amplifier board (Fig. 6-1) until ac signal displayed on chart is the same amplitude when the polarity switch is changed from normal (N) to reverse (R) position.

d. Internal Calibration Voltage

1. Connect a differential voltmeter across contacts 1 and 2 of amplifier board (Fig. 6-1).

2. Press preamplifier OFF button. Voltage on meter will read zero.

3. Press preamplifier CHECK button of RECORDER group. (CAL switch must be in INT (Internal) position. (see Fig. 5-1)

4. Adjust resistor R-207 on power supply board (Fig. 6-2) until voltage on meter reads 1.250 ±.001 volt.

5. Check that pen on chart deflected 25 divisions. If not, refer to calibration section in system manual for channel gain adjustment.

6. Press oscillograph STOP button.

7. Disconnect differential voltmeter from amplifier board.

8. Disconnect signal generator from connector J-3.

9. Turn off system power.

10. Install preamplifier printed circuit board cover.

11. Install preamplifier in cabinet (refer to Para. 2.2).

12. Remove board from oscillograph, slide oscillograph into cabinet, and secure with four captive thumb screws.

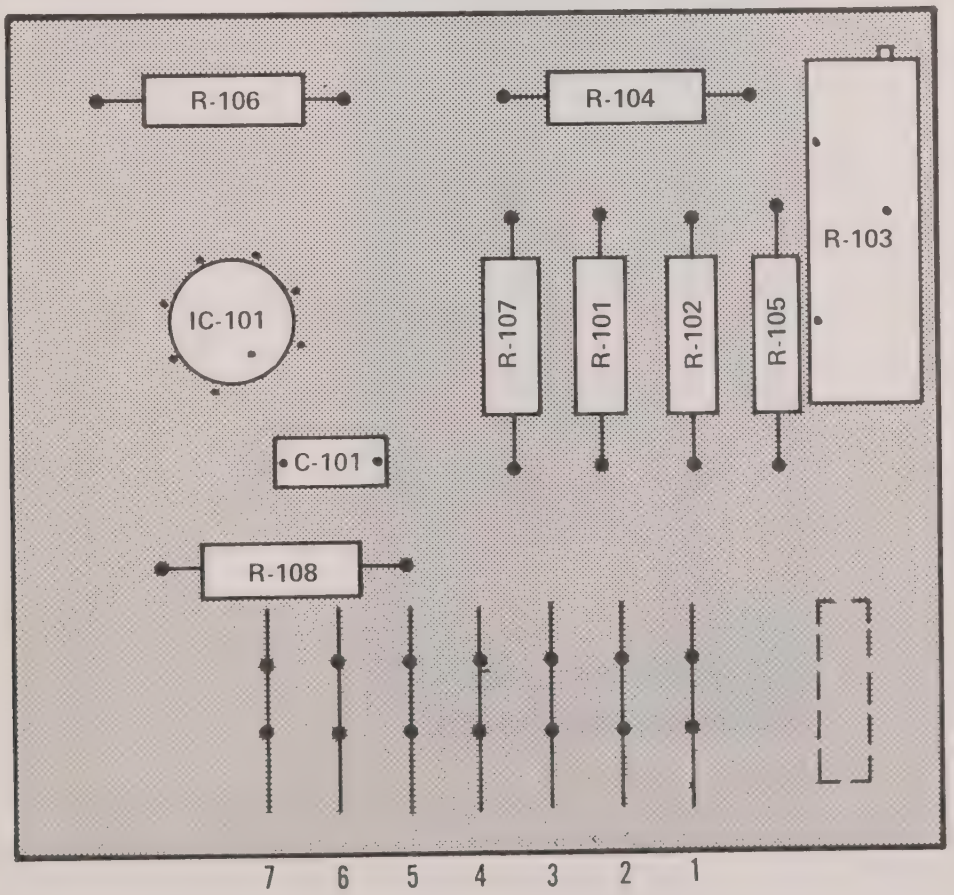

FIGURE 6-1 AMPLIFIER BOARD - PLAN VIEW

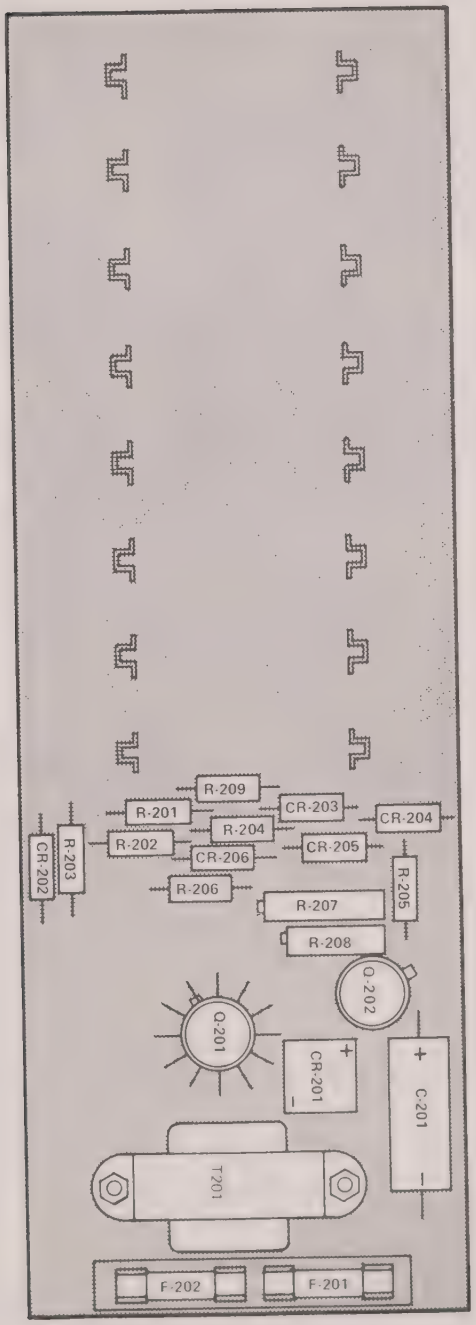

FIGURE 6-2 POWER SUPPLY BOARD - PLAN VIEW

SECTION VII
THEORY OF OPERATION

7.1 GENERAL

Preamplifier, Model 13-4185-05 (Fig. 7-1), consists of eight plug-in differential operational amplifier assemblies mounted on a common power supply board. Attenuation of the input signal is accomplished by front panel controls, as is pen position and signal polarity.

The input signal is applied to the attenuator network, thru the RECORDER group and POLARITY reversal switches and into the operational amplifier assemblies. A second input from the pen POSITION potentiometer biases the input signal to be positioned on the chart.

When polarity reversal switch is placed in N (Normal) position, the signal from the RECORDER group switch is coupled thru the operational amplifier to the pen drive amplifier. When the reversal switch is placed in the R (Reverse) position, the polarity of the signal from the RECORDER group switch is reverse-coupled thru the operational amplifier to the pen drive amplifier.

7.2 DETAILED DESCRIPTION

a. Power Supply (Fig. 7-2)

The power input is supplied by transformer T-201 thru rectifier CR-201 and a filter C-201 to a current regulator circuit comprised of diode CR-202, transistor Q-201, and resistors R-201 thru R-203. The current passed by transistor Q-201 drives the voltage regulator diodes CR-203 thru CR-206 to supply ±10 volts for the individual amplifier circuits.

Divider network, consisting of resistors R-204, R-205 and R-207, comprises the CAL (calibrate) voltage supply. Resistors R-206 and R-208 and transistor Q-202 provide regulated voltage for the identify circuitry and resistor R-209 provides a load on the negative (—) side of the voltage supply.

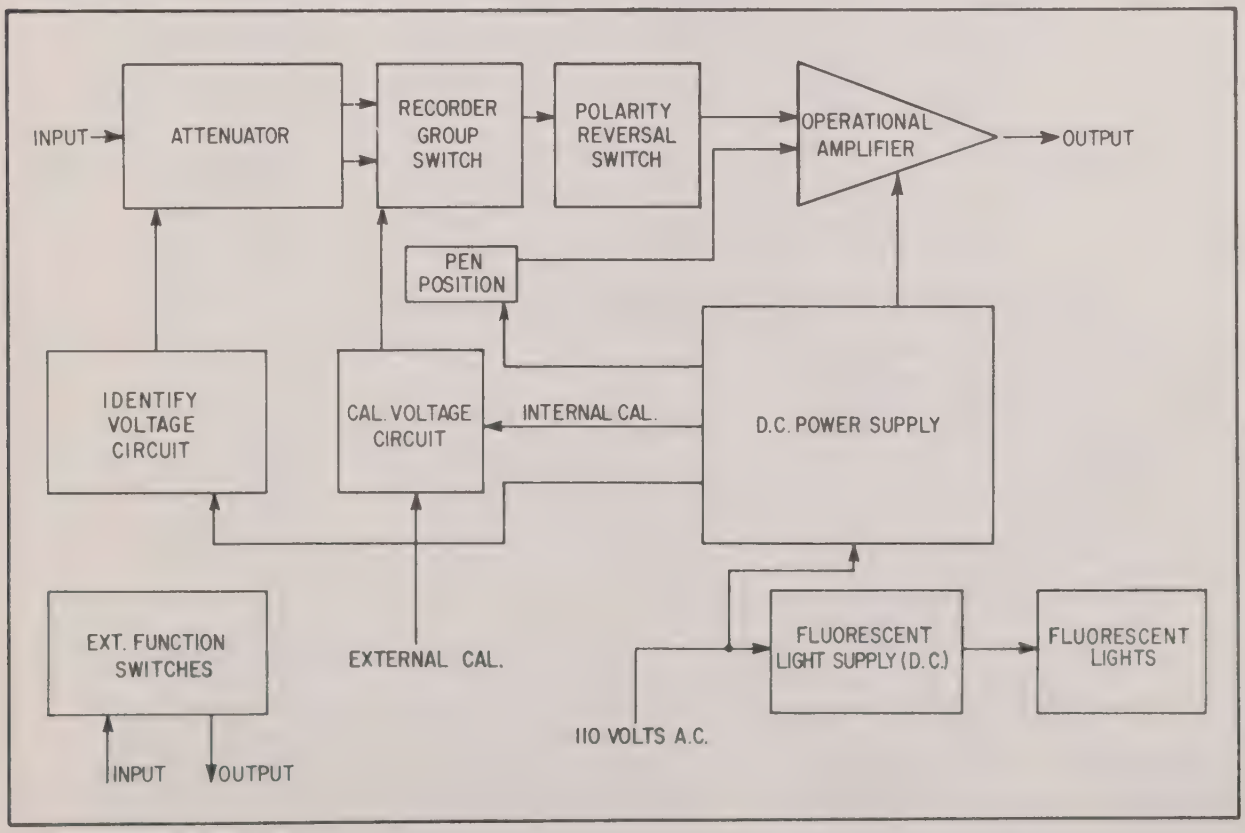

FIGURE 7-1 PREAMPLIFIER 13-4185-05 - BLOCK DIAGRAM

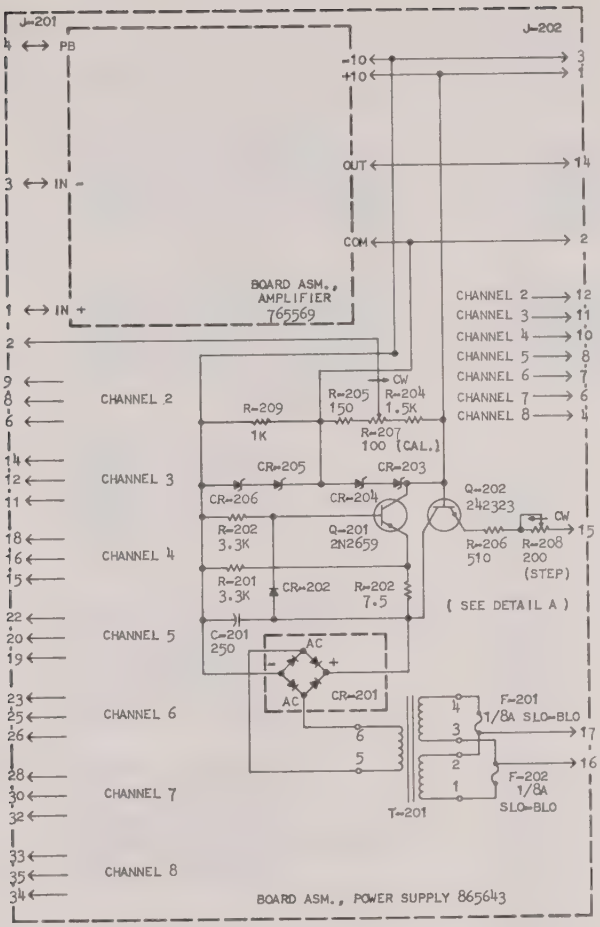

FIGURE 7-2 POWER SUPPLY BOARD - CIRCUIT DIAGRAM

b. Amplifier Board Assembly (Fig. 7-3)

Each amplifier board consists of a direct-coupled, differential amplifier with three inputs thru resistors R-101, R-102 and R-107. Normal gain is fixed by resistors R-101 and R-106. Reverse gain is varied and controlled by resistors R-102, R-105 and R-103. Resistor R-104 provides stability in the reverse mode and resistor R-108 controls offset.

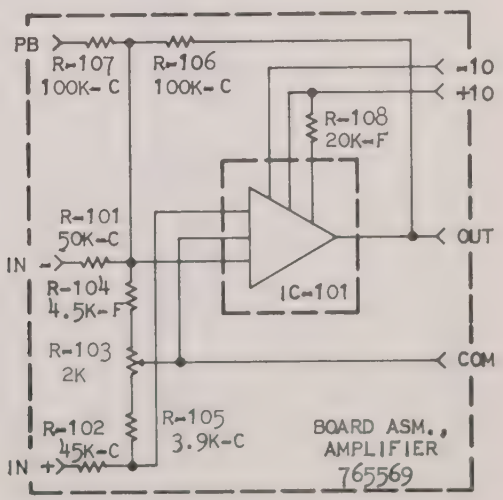

FIGURE 7-3 AMPLIFIER BOARD ASSEMBLY - CIRCUIT DIAGRAM

SECTION VIII
PARTS IDENTIFICATION

EXPLODED VIEW PARTS LIST
PREAMPLIFIER 13-4185-05

INDEX NO	PART NUMBER	DESCRIPTION	SYMBOL NO
1	854709	Bracket Asm, Sensitivity	
2	247236	Resistor, Variable with Switch	R-701/S-701
3	247236	Resistor, Variable with Switch	R-702/S-702
4	247236	Resistor, Variable with Switch	R-703/S-703
5	247236	Resistor, Variable with Switch	R-704/S-704
6	247236	Resistor, Variable with Switch	R-705/S-705
7	247236	Resistor, Variable with Switch	R-706/S-706
8	247236	Resistor, Variable with Switch	R-707/S-707
9	247236	Resistor, Variable with Switch	R-708/S-708
10	365705	Bracket, Chassis Support R.H.	
11	9-247923-9	Connector, 9 Pin	J-304
12	865726	Chassis, Subasm (see sep. view)	
13	246295	Connector	P-201
14	246295	Connector, P.C. Female	P-202
15	265914	Switch	S-401
16	765704	Switch, Pushbutton (see sep. view)	S-508
17	765704	Switch, Pushbutton	S-507
18	765704	Switch, Pushbutton	S-506
19	765704	Switch, Pushbutton	S-505
20	765704	Switch, Pushbutton	S-504
21	765704	Switch, Pushbutton	S-503
22	765704	Switch, Pushbutton	S-502
23	765704	Switch, Pushbutton	S-501
24	765706	Switch Asm (see sep. view)	S-601
25	247719	Resistor, Variable	R-709
26	247719	Resistor, Variable	R-710
27	247719	Resistor, Variable	R-711
28	247719	Resistor, Variable	R-712
29	247719	Resistor, Variable	R-713
30	247719	Resistor, Variable	R-714
31	247719	Resistor, Variable	R-715
32	247719	Resistor, Variable	R-716
33	865710	Bracket Asm	
34	248752	Switch, DPDT	S-716
35	248752	Switch, DPDT	S-715
36	248752	Switch, DPDT	S-714
37	248752	Switch, DPDT	S-713
38	248752	Switch, DPDT	S-712
39	249752	Switch, DPDT	S-711
40	248752	Switch, DPDT	S-710
41	248752	Switch, DPDT	S-709
42	232275	Screw, Panel	
43	240093	Nut, Plain-knurled	
44	240497	Knob	
45	240498	Nut, Self Lock-knurled	

EXPLODED VIEW PARTS LIST (continued)
PREAMPLIFIER 13-4185-05

INDEX NO	PART NUMBER	DESCRIPTION	SYMBOL NO
46	231183	Knob	
47	231182	Nut, Self-Lock-knurled	
48	867281	Panel Subasm, Front	
49	246552-1	Button, Push	
50	121121	Receptacle (on Main Connector Panel)	J-2
51	122105	Connector	P-2
52	665770	Cable Asm, Power	
53	121047	Receptacle (on Main Connector Panel)	J-3
54	122109	Connector	P-3
55	248211-24	Socket, Lamp	
56	248211-24	Socket, Lamp	
57	248211-24	Socket, Lamp	
58	248211-24	Socket, Lamp	
59	108572-11	Bushing, Strain Relief	
60	231961	Lamp, Fluorescent	DS-301
61	231961	Lamp, Fluorescent	DS-302
62	231961	Lamp, Fluorescent	DS-303
63	231961	Lamp, Fluorescent	DS-304
64	248211-24	Socket, Lamp	
65	248211-24	Socket, Lamp	
66	248211-24	Socket, Lamp	
67	248211-24	Socket, Lamp	
68	232895	Switch, Slide SPDT	S-801
69	9-247923-9	Connector, 9 Pin	J-303
70	365703	Bracket, Chassis Support L.H.	

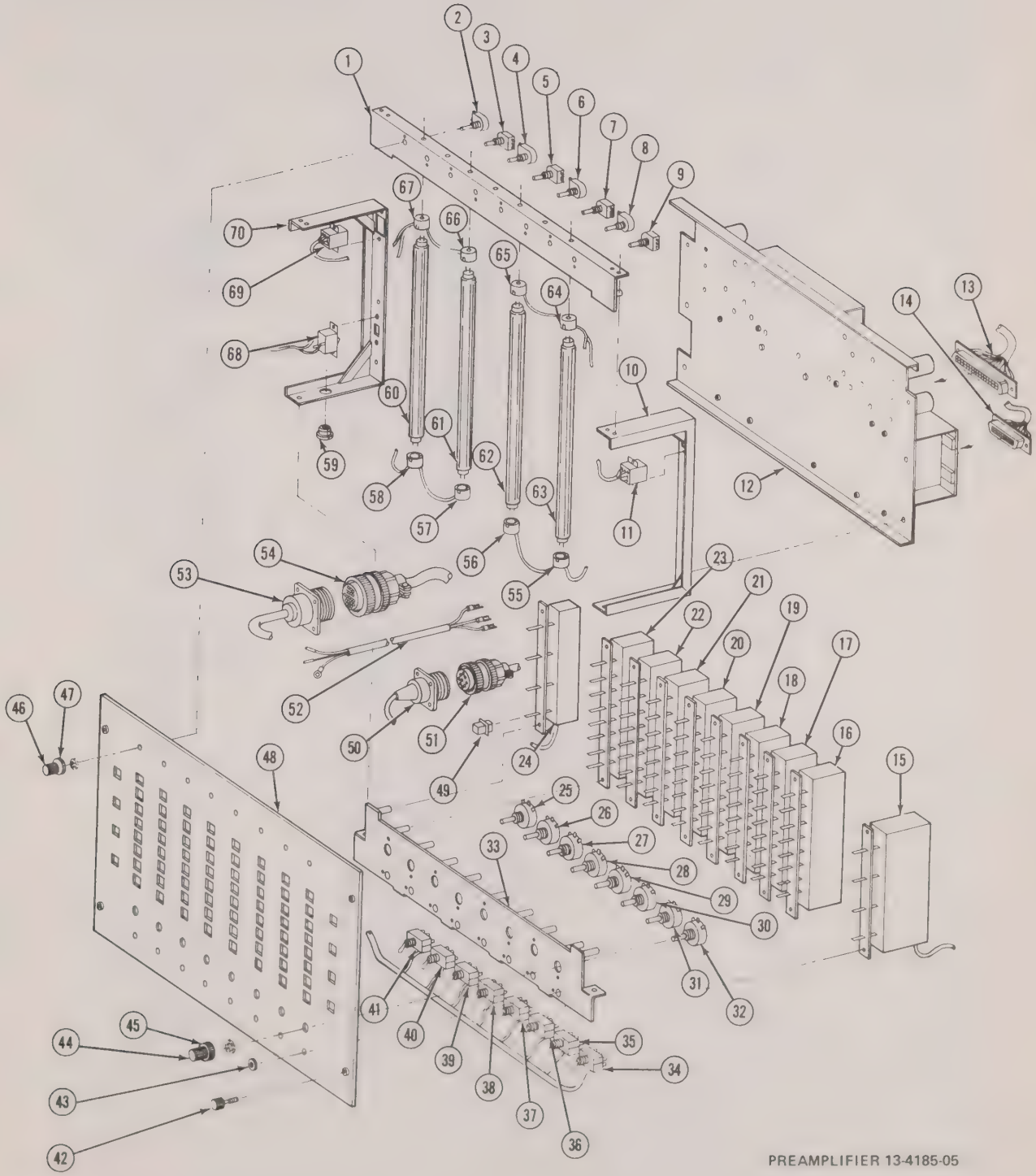

PREAMPLIFIER 13-4185-05

EXPLODED VIEW PARTS LIST
PREAMPLIFIER 13-4185-05 CHASSIS ASSEMBLY 865726

INDEX NO	PART NUMBER	DESCRIPTION	SYMBOL NO
1	9-247924-9	Connector	P-303
2	1-247925	Lamp Starter Socket Contacts	
3	231695	Lamp Starter Socket	
4	231964	Starter, Lamp	S-301
5	231964	Starter, Lamp	S-302
6	3-246015-300	Resistor, 30 ohm	R-302
7	3-246015-300	Resistor, 30 ohm	R-301
8	1-264015-501	Resistor, 500 ohm	R-306
9	1-264015-501	Resistor, 500 ohm	R-305
10	242912-7	Board, Terminal	
11	10-241145-205	Capacitor, 2 mfd	C-802
12	241513-206	Capacitor, 20 mfd	C-806
13	130198-2	Diode, 1N2070	CR-302
14	130198-2	Diode, 1N2070	C-805
15	241513-206	Capacitor, 20 mfd	
16	10-241145-205	Capacitor, 2 mfd	C-801
17	264798-2	Fuse, 1.5 amp	F-301
18	10-241145-205	Capacitor, 2 mfd	C-804
19	241513-206	Capacitor, 20 mfd	C-809
20	130198-2	Diode, 1N2070	CR-304
21	130198-2	Diode, 1N2070	CR-303
22	241513-206	Capacitor, 20 mfd	C-808
23	10-241145-205	Capacitor, 2 mfd	C-803
24	266027	Shield	
25	765702	Cover Asm, Amplifier	
26	765569	Board Asm, Amplifier (see sep. view)	
27	865643	Board Asm, Power Supply (see sep. view)	
28	231964	Starter Lamp	S-304
29	231964	Starter Lamp	S-303
30	665673	Gasket Asm, Lamp starter	
31	665673	Gasket Asm, Lamp starter	
32	1-264015-501	Resistor, 500 ohm	R-308
33	1-264015-501	Resistor, 500 ohm	R-307
34	3-246015-300	Resistor, 30 ohm	R-303
35	3-246015-300	Resistor, 30 ohm	R-304
36	9-247924-9	Connector	P-304
37	865725	Chassis, Subasm	

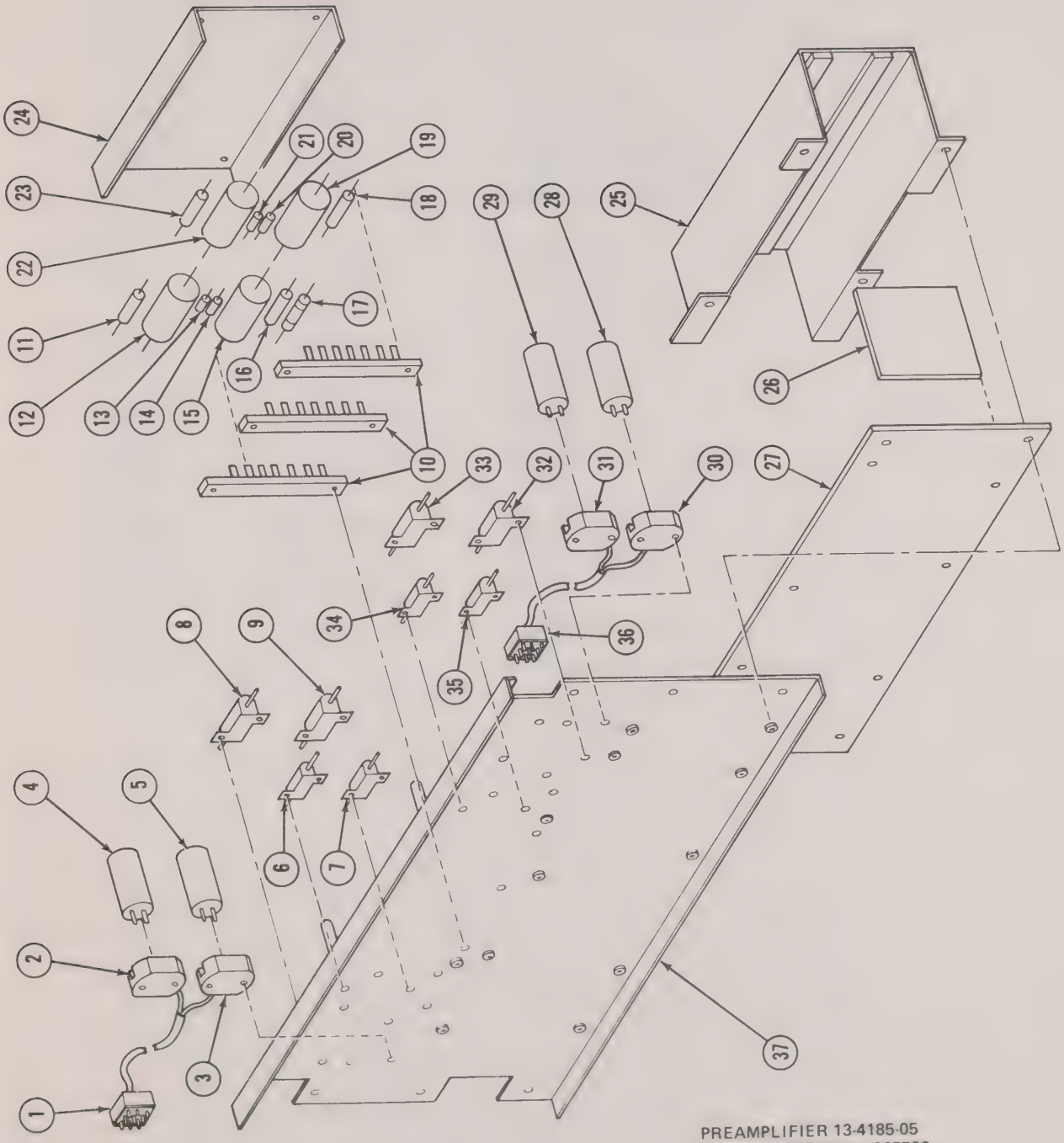

PREAMPLIFIER 13-4185-05
CHASSIS ASSEMBLY 865726

ELECTRICAL PARTS LIST
POWER SUPPLY ASSEMBLY 865643

SYMBOL NO	PART NUMBER	DESCRIPTION
C-201	243037-257	Capacitor
CR-201	265420-1	Semiconductor
CR-202	231869	Diode, 1N816
CR-203	241133	Diode, Zener, 1N751A
CR-204	241133	Diode, Zener, 1N751A
CR-205	241133	Diode, Zener, 1N751A
CR-206	241122	Diode, Zener, 1N751A
F-201	116198-3	Fuse, Cartridge
F-202	116198-4	Fuse, Cartridge
Q-201	262454	Transistor, 2N2659
Q-202	242323	Transistor
R-201	5-115557-332	Resistor
R-202	5-115557-332	Resistor
R-203	5-115557-7R5	Resistor
R-204	5-115557-152	Resistor
R-205	5-115557-151	Resistor
R-206	5-115557-511	Resistor
R-207	20-231373-101	Resistor, Variable
R-208	244771-201	Resistor, Variable
R-209	5-115557-102	Resistor
T-201	265531	Transformer, Power

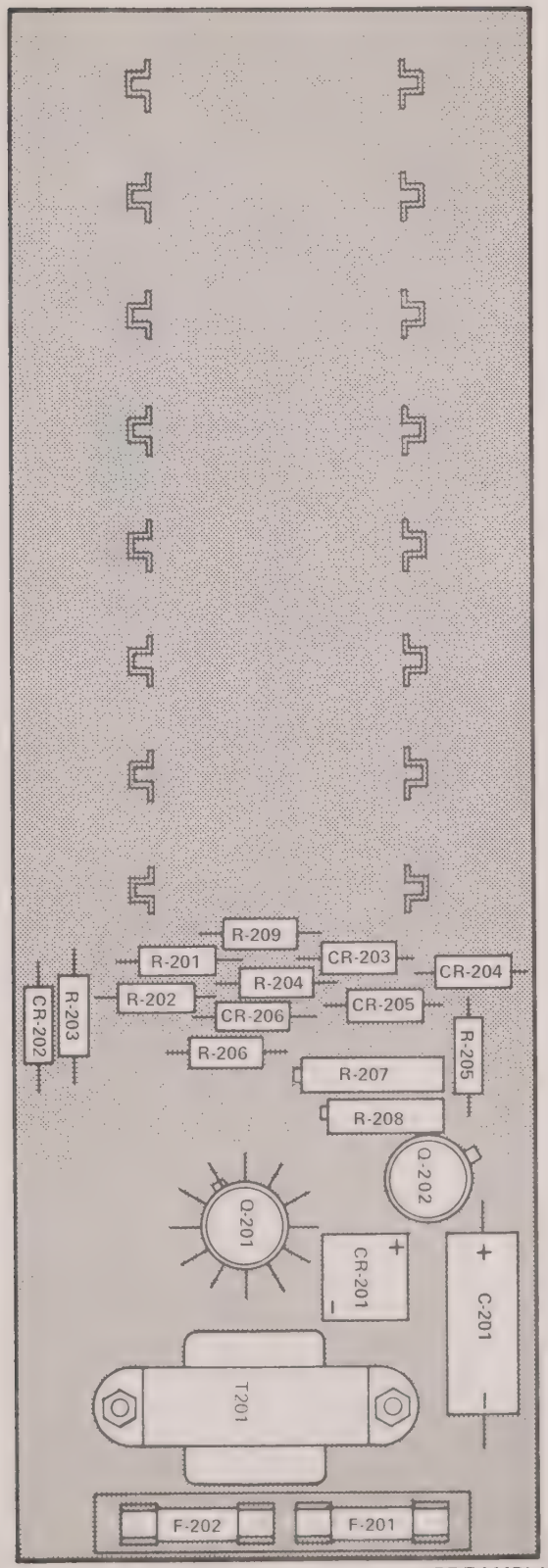

PREAMPLIFIER 13-4185-05
POWER SUPPLY ASSEMBLY 865643

ELECTRICAL PARTS LIST
AMPLIFIER BOARD ASSEMBLY 763369

SYMBOL NO	PART NUMBER	DESCRIPTION
IC-101	668839	Amplifier, Operational
	consists of:	
	240352-5R0	Capacitor
	230062	Semiconductor
R-101	25-240368-50001	Resistor
R-102	25-240368-45001	Resistor
R-103	268940-202	Resistor, Variable
R-104	1-128182-4501	Resistor
R-105	1-128182-3901	Resistor
R-106	25-240368-10002	Resistor
R-107	25-240368-10002	Resistor

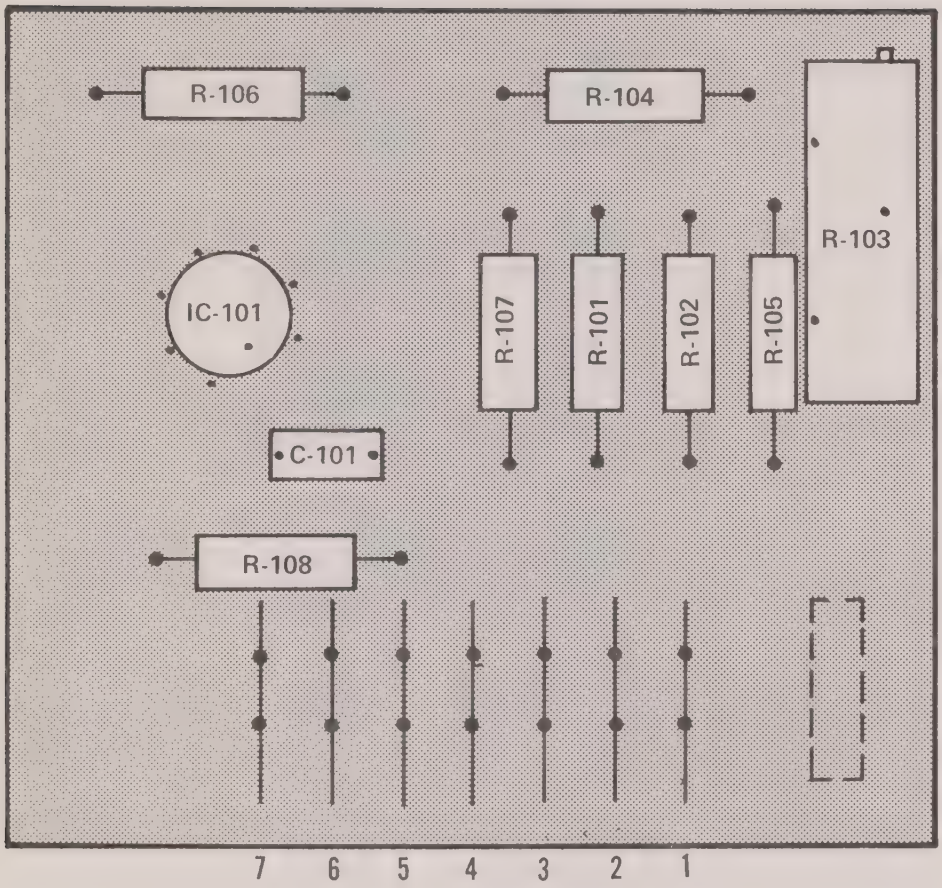

PREAMPLIFIER 13-4185-05
AMPLIFIER BOARD ASSEMBLY 765569

ELECTRICAL PARTS LIST
SENSITIVITY (ATTENUATOR) SWITCH ASSEMBLY **765704**

SYMBOL NO	PART NUMBER	DESCRIPTION
R-501	5-115557-510	Resistor
R-502	5-115557-510	Resistor
R-503	5-115557-510	Resistor
R-504	5-115557-510	Resistor
R-505	5-115557-510	Resistor
R-506	5-115557-510	Resistor
R-507	5-115557-510	Resistor
R-508	25-240368-508R0	Resistor
R-509	25-240368-778R0	Resistor
R-510	25-240368-13500	Resistor
R-511	25-240368-29240	Resistor
R-512	25-240368-11111	Resistor
R-513	25-240368-33331	Resistor
R-514	25-240368-25001	Resistor
R-515	25-240368-12501	Resistor
R-516	25-240368-75000	Resistor
R-517	25-240368-25000	Resistor
R-518	25-240368-12500	Resistor
R-519	25-240368-750R0	Resistor
R-520	5-115557-471	Resistor
R-521	5-115557-472	Resistor
S-501	347094	Switch, Pushbutton - 8 Pos

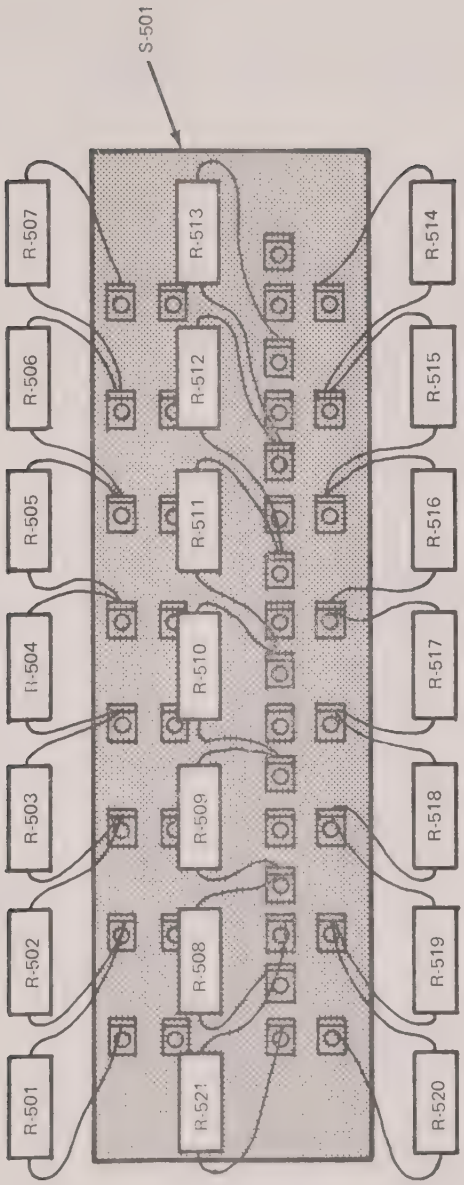

PREAMPLIFIER 13-4185-05
SWITCH ASSEMBLY (ATTENUATOR) 765704

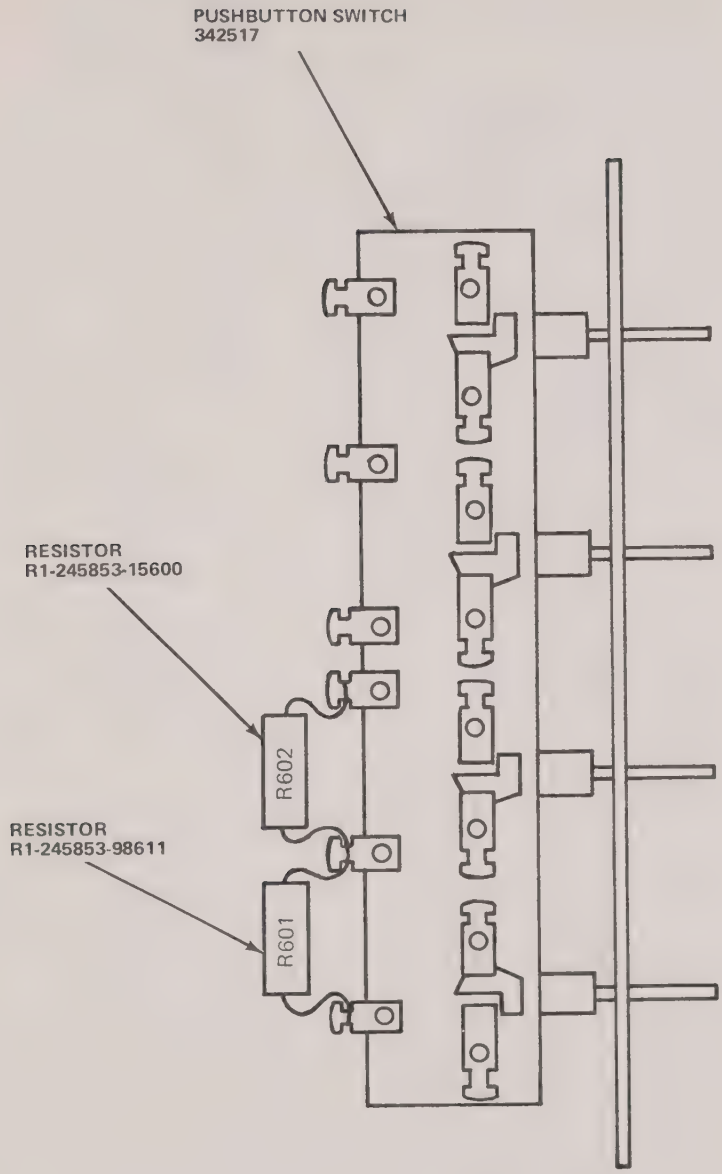

PREAMPLIFIER 13-4185-05
EXTERNAL FUNCTION SWITCH ASM 765706 (S-601)

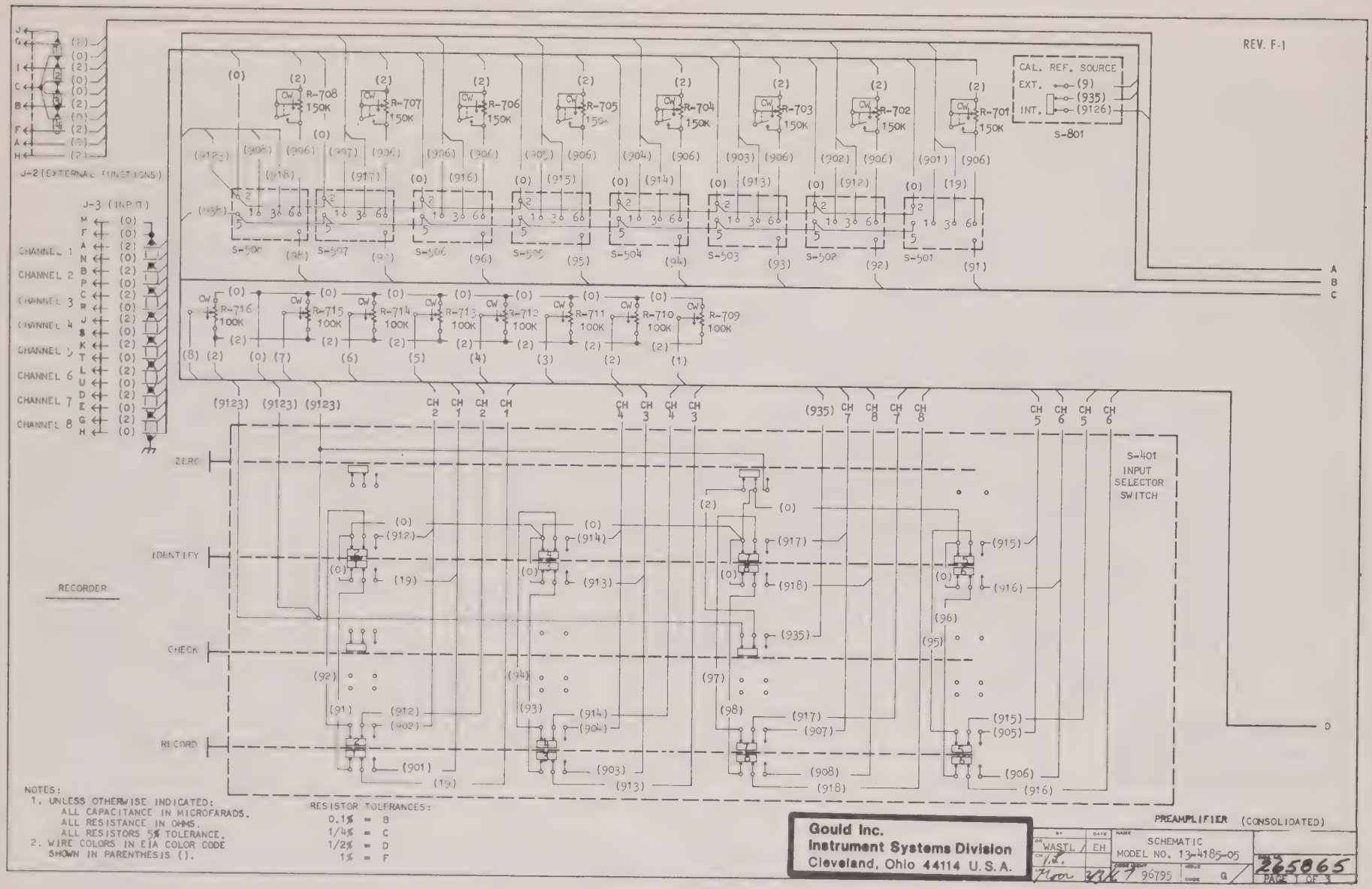

NOTES:
1. UNLESS OTHERWISE INDICATED:
   ALL CAPACITANCE IN MICROFARADS.
   ALL RESISTANCE IN OHMS.
   ALL RESISTORS 5% TOLERANCE.
2. WIRE COLORS IN EIA COLOR CODE SHOWN IN PARENTHESIS ( ).

RESISTOR TOLERANCES:
0.1% = B
1/4% = C
1/2% = D
1% = F

Gould Inc.
Instrument Systems Division
Cleveland, Ohio 44114 U.S.A.

PREAMPLIFIER (CONSOLIDATED)

BY	DATE	NAME
WASTL	EH	SCHEMATIC
CH		MODEL NO. 13-4185-05
T.L.		
Moon	3/17	96795

SIZE G — 265065 — PAGE 1 OF 3

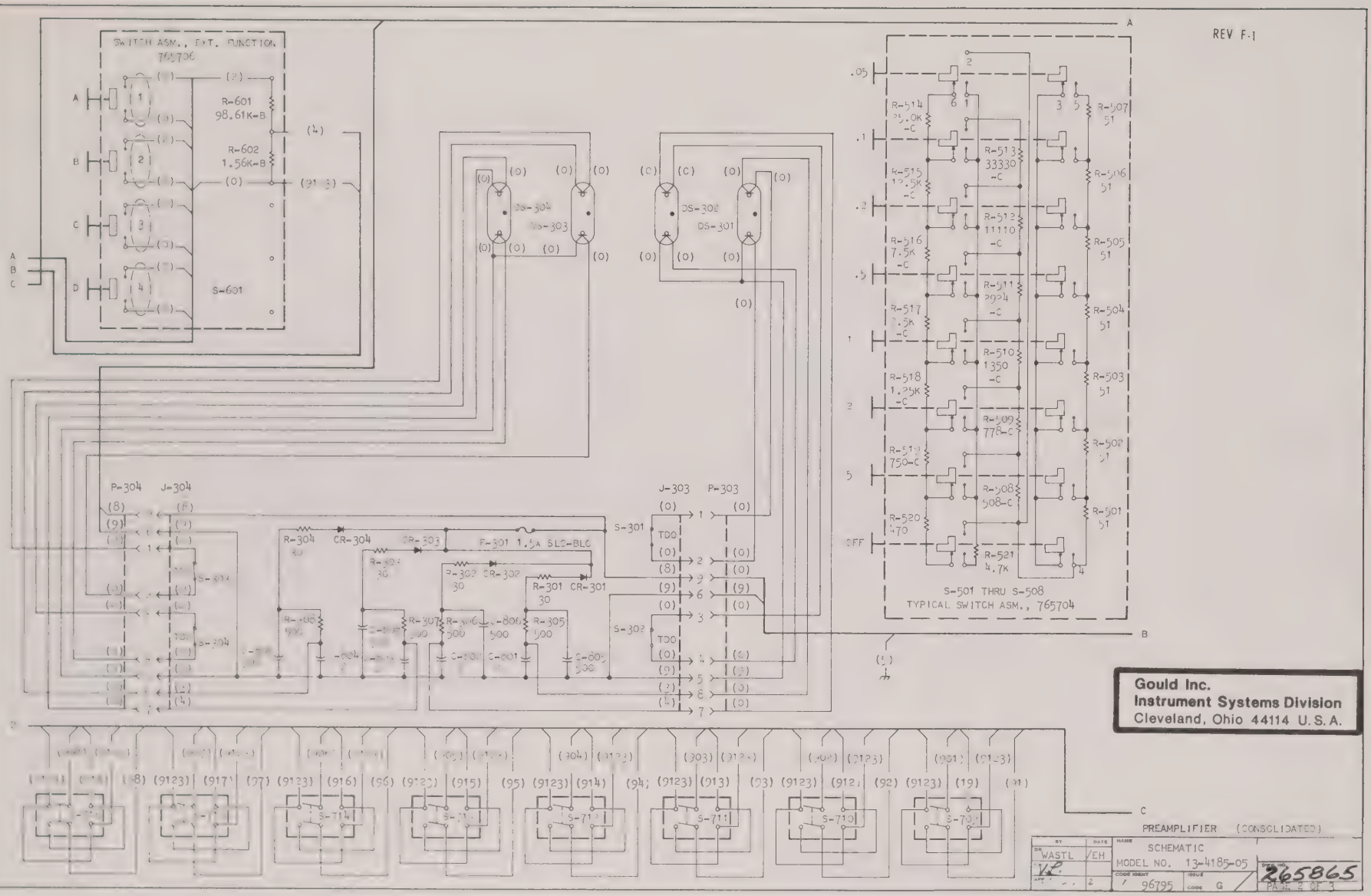

REV F-1

Gould Inc.
Instrument Systems Division
Cleveland, Ohio 44114 U.S.A.

PREAMPLIFIER (CONSOLIDATED)

BY	DATE	NAME
WASTL	/EH	SCHEMATIC

MODEL NO. 13-4185-05

CODE IDENT 96795 | ISSUE CODE G

DWG NO. 265865

PAGE 2 OF 3

REV. F-1

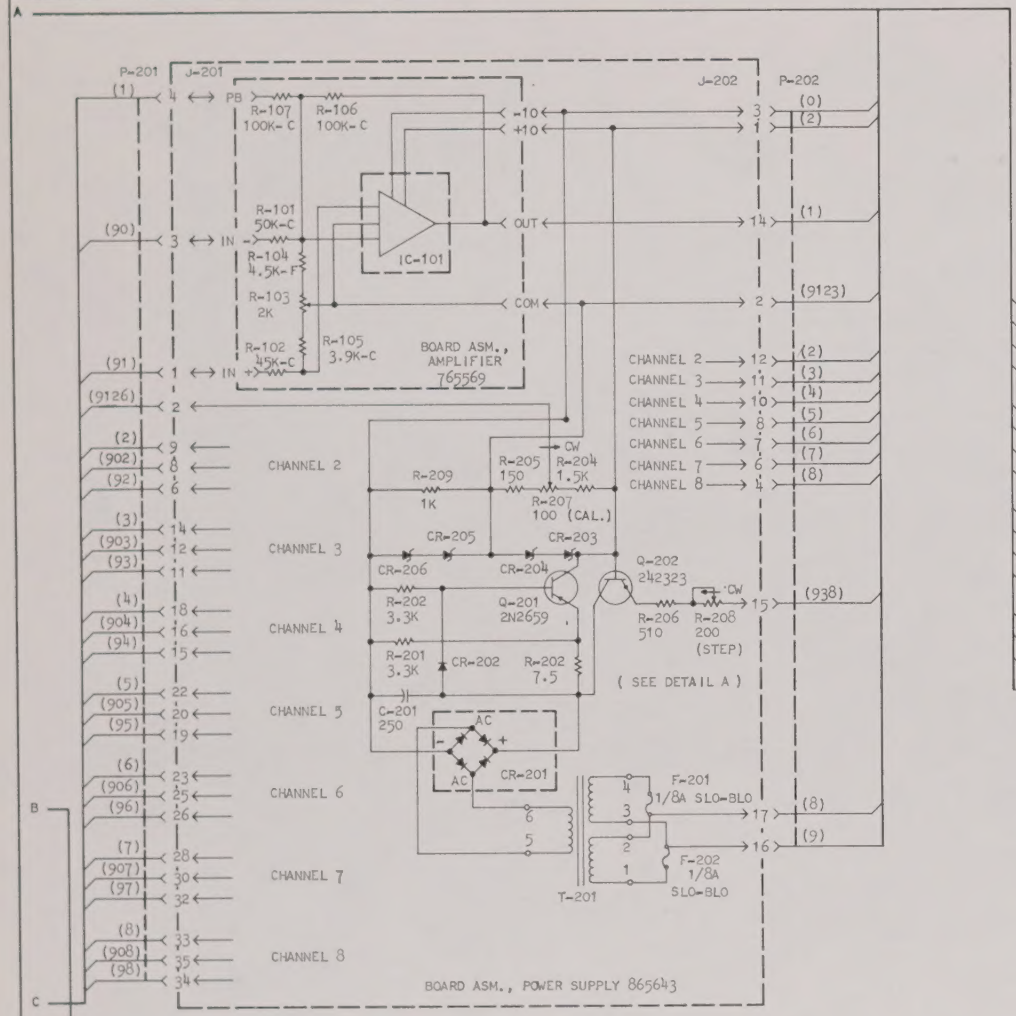

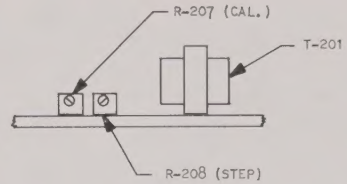

DETAIL A (LOCATION OF R-207 & R-208)

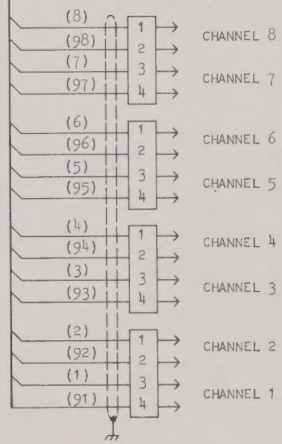

TABLE OF CONTROL SYMBOLS

CHANNEL	SENSITIVITY	ATTENUATOR	PEN BIAS	POLARITY
1	R-701	S-501	R-709	S-709
2	R-702	S-502	R-710	S-710
3	R-703	S-503	R-711	S-711
4	R-704	S-504	R-712	S-712
5	R-705	S-505	R-713	S-713
6	R-706	S-506	R-714	S-714
7	R-707	S-507	R-715	S-715
8	R-708	S-508	R-716	S-716

(0) AC HOT (9) AC NEUT. (5) GND

Gould Inc.
Instrument Systems Division
Cleveland, Ohio 44114 U.S.A.

PREAMPLIFIER (CONSOLIDATED)

DR	BY	DATE	NAME
	WASTL	EH	SCHEMATIC

MODEL NO. 13-4185-05

CODE IDENT. 96795 | ISSUE CODE G

DWG NO. 265865

www.manualsplus.com
1025743